FR Series Battery Chargers

❖ INSTALLATION • OPERATION

English

Dometic® Sentry™

Automatic Ferro-Resonant Battery Charger

Revised: 5-26-05
L-0921 (Formerly LP-16)

CE

Table of Contents

FR Series Battery Chargers

Warnings 4
Spare Parts - Field Repairs 4

Installation Instructions **4**

Operating Instructions **5**

Troubleshooting **6**
System Troubleshooting 6
Control Calibration Procedures 6

Owner's Limited Warranty **7**

Limited Warranty Periods **9**

Description of Drawings **10**

Cruisair Dealer Locator **13**

FR Series Battery Chargers

⚠ ***Warnings***

This manual contains essential information concerning the operation of your Sentry battery charger. It is very important that you read and understand the contents of this manual before using the equipment, and it should be kept on the boat for future reference.

Improper installation can cause serious injury or death, as well as damage or destruction of the vessel.

If you have any questions about the contents of this manual, contact your local Sentry dealer or the Dometic Service Department for assistance.

Design and Calibration

This charger is designed specifically for marine grade, deep cycle, lead acid (free) batteries. For other types, contact the factory for the proper calibration.

NOTE: "Figures" referenced in the text of this manual can be found in the back of the book.

Spare Parts - Field Repairs

This charger may be field repaired. It is one of the few that is manufactured where this is possible. This feature reinforces the benefits of this robust, long lived product.

We recommend that you carry a few spare parts. These parts will decrease the need for waiting periods should your Sentry require service. See Fig. 7 for spare parts.

Installation Instructions

Location

Dry, well ventilated.
Near batteries, but not above the batteries.
Ventilation: Allow 7.6 cm (3 in) of clearance on all sides

Electrical Connections

Wire size: see "Wiring Gauge and Grade Chart"

AC Circuit breaker: see "Wiring Gauge and Grade Chart"

DC Fuse: see "Wiring Gauge and Grade Chart"

Battery Connections

Positive terminal of each battery - connect to individual studs labeled "+ BATTERY." See Figure 2 - AC & DC Connections.

Negative terminals - Connect all terminals to the stud labeled "—BATTERY."

Use "ring" terminals for all connections to the charger.

Sensing Wire Connections

Find the four (4) sensing wires - color red - these are attached to the primary "+BATTERY" stud. Place one sensing wire on each battery bank stud to which a bank is connected. Those not used should be left attached to the primary "+BATTERY" stud. See Figure 3.

AC Voltage Choice

See the diagram "Interpreting Model Numbers." Select 115 V or 230 V input if your charger has this capability.

Frequency Selection

See the diagram "Interpreting Model Numbers." Select 50 HZ or 60HZ input if your charger has this capability.

Operating Instructions

Full Automatic or Manual Mode

Sentry FR chargers are designed for fully automatic operation, or for manual operation. In the automatic mode, the charger will turn “off” when a full charge condition is “sensed.”

Circuit Breaker at Ship’s Panel

Activate the circuit breaker.
Charger indication: Light - Red.

Automatic/Manual Selector Switch

Set to “automatic.” This is the selection for the majority of conditions.

Set to “Manual”:

(Recommended for short time frames only.)

• If an “extra” charge for starting the engine is needed.

Note: Leave in “Automatic” all other times.

To leave in “Manual” will:

• Overcharge the battery.
• Dehydrate the battery.
• Warp the plates in the battery.

Ammeter Indications

All batteries fully charged: Ammeter indication = 0.
Batteries not fully charged: Ammeter shows output in amperes.

Interpreting Model Numbers

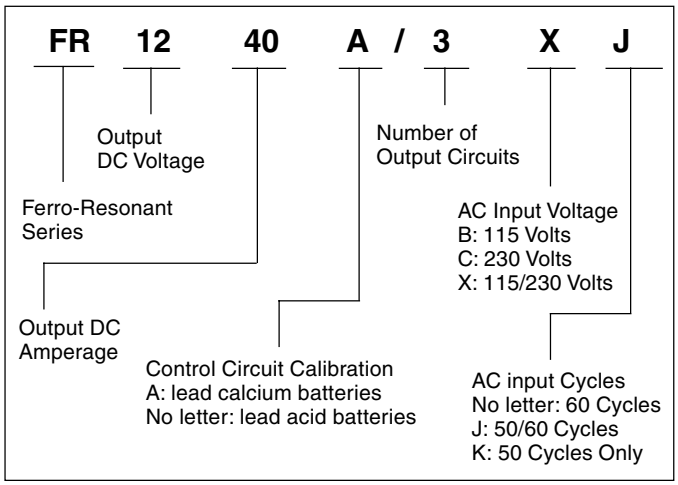

Wiring Gauge & Grade Chart

Sentry Model	Wire Gauge Sentry Unit to Batteries 0-10 Ft	10-25 Ft.	AC Cir. Bkr.	DC Fuse	AC Fuse*
FR1220/3B	10	8	10A	BAF30	5A
FR1240/3X	6	4	15A	ANL50	10A
FR1240A/3X	6	4	15A	ANL50	10A
FR1240/3XJ	6	4	15A	ANL50	10A
FR1260/3X	6	2	15A	ANL80	15A
FR1260/4X	6	2	15A	ANL80	15A
FR1260A/3X	6	2	15A	ANL80	15A
FR2425/3X	10	8	15A	ANL35	10A
FR2425A/3X	10	8	15A	ANL35	10A
FR2440/3X	8	6	15A	ANL50	15A
FR2440A/3X	8	6	15A	ANL50	15A
FR2440/3XJ	8	6	15A	ANL50	15A
FR2460/3XJ	6	2	20A	ANL80	20A
FR2460/4XJ	6	2	20A	ANL80	20A
FR3230/3X	8	6	20A	ANL40	20A

Note: All wire insulation should be rated for 105 C.

* AC Fuses rated slow blow at 250VAC (fuses implemented on Dec 2004, Serial# 448*****

Troubleshooting

Warning

Only the following are recommended for an owner. All other work should be done by an authorized Sentry service representative.

Always "de-energize" by turning "off" the AC circuit breaker at the ship's main panel before removing the cover or attempting to repair this charger.

If you have continued occurance of the same problem, contact an authorized service representative or the Dometic factory.

System Troubleshooting

Situation

Will not charge in either manual or automatic position; ammeter indicates "0" amps.

Solution

1. DC fuse has failed. Replace.
2. AC circuit breaker has failed. Reset. Consult circuit breaker/fuse chart.
3. AC fuse has failed. Replace.

Situation

Charger turns "off" or "on" too early or too late.

Solution

1. Battery connections "loose" or "dirty." Tighten, and/or clean.
2. Control circuit - out of calibration. See calibration procedures.

Situation

Charger will not charge. Transformer is "active."

Solution

1. Battery connections "loose" or "dirty." Tighten, and/or clean.
2. DC fuse has failed. Replace. Consult circuit breaker/fuse chart.

Situation

Full charge light will not illuminate. Charger turns "on" and "off" properly.

Solution

Lamp defective. Replace lamp.

Situation

Charger does not turn "off," and the ammeter shows that charger is active.

Solution

1. Automatic/Manual selector switch in "manual" position. Switch to "automatic."
2. Determine if battery connections are clean and tight.
3. Shorted cell in battery - replace battery.
4. Control circuit out of calibration - calibrate. See calibration procedures.

Control Calibration Procedures

See chart below for voltages

1. Connect four (4) sensing wires (color - red) from the control to a single "+BATTERY" tab terminal, to which a battery is connected.
2. Determine the voltage between this terminal (see above) and the "--- BATTERY" terminal. Use a digital voltmeter accurate to .1 volt.
3. See table (below) to understand correct "pull-in" and "drop-out" voltage.
4. FR type chargers - set "pull-in" first. Apply a small load (interior light, etc). Note the "pull-in" voltage.
5. Locate "pull-in" potentiometer. If "pull-in" high - decrease - turn clockwise.

   If "pull-in" low - increase - turn counter-clockwise.
   Allow the charger to raise the battery voltage; note "drop-out" voltage.

   Locate "drop-out" potentiometer.
   If "drop-out" high - decrease differential - turn clockwise.

   If "drop-out" low - increase - turn counter-clockwise.

   Repeat procedure - until the correct voltage is obtained.
6. Replace the sensing wires (color - red).

   Note: do not attach a red wire where there is no battery. If extra wires, attach to a terminal with a battery (more than one sensing wire is acceptable). All red wires must be attached to a battery. See Figure 3.

	Pull In	Drop Out
12 Volt Chargers	12.8	13.9
24 Volt Chargers	25.5	28.0
32 Volt Chargers	34.5	37.5

Owner's Limited Warranty

As hereinafter described, Dometic Environmental Corporation limits the duration of any implied warranty to the duration of the underlying express warranty and also disclaims any liability for consequential or incidental damages arising from any application, installation, use or malfunction of any warranted product.

Section I

What does the Limited Warranty cover?

Products manufactured by Dometic Environmental Corporation (Dometic) are under limited warranty to be free from defects in workmanship or materials under normal use and service with the obligation of Dometic under this limited warranty being limited to replacing or repairing any component(s) which shall disclose defects within the time limits defined in **Section III** and which, upon examination by Dometic, shall appear to the satisfaction of Dometic to be defective or not up to specifications.

This Limited Warranty is made in lieu of all other express warranties, obligations, or liabilities on the part of Dometic. In addition, Dometic shall not be responsible for any incidental or consequential damages. In those instances in which a cash refund is made, such refund shall effect the cancellation of the contract of sale without reservation of rights on the part of the purchaser. **Such refund shall constitute full and final satisfaction of all claims which purchaser has or may have against Dometic due to any actual or alleged breach of warranty, either express or implied, including, without limitation, any implied warranty of merchantability or fitness for a particular purpose.** Some states do not allow the exclusion or limitation of incidental or consequential damages so the above limitation may not apply to you. The terms and conditions of this warranty shall be governed by the laws of the Commonwealth of Virginia.

The Dealer is not an agent for Dometic except for the purpose of administering the above warranty to the extent herein provided, and Dometic does not authorize the dealer or any other person to assume for Dometic any liability in connection with such warranty, or any liability or expense incurred in the replacement or repair of its products other than those expressly authorized herein. Dometic shall not be responsible for any liability or expense except as is specifically authorized and provided in this section.

Dometic reserves the right to improve its products through changes in design or material without being obligated to incorporate such changes in products of prior manufacture, and to make changes at any time in design, materials, or part of units of any one year's model, without obligation or liability to owners of units of the same year's model of prior manufacture.

This warranty gives you, the purchaser, specific legal rights, and you may also have other rights which vary from state to state. You also have implied warranty rights, including an implied warranty of merchantability, which means that your product must be fit for the ordinary purposes for which such goods are used. ***The duration of any implied warranty rights is limited to the duration of the express warranty as found in Section III.*** Some states do not allow limitations on how long an implied warranty lasts, so the above limitation may not apply to you.

Section II

What does this Limited Warranty not cover?

This Warranty Shall Not Apply to:

1. Failures resulting from improper installation or use contrary to instructions.
2. Failures resulting from abuse, misuse, accident, fire, or submergence.
3. Any part manufactured by Dometic which shall have been altered so as to impair its original characteristics.
4. Any parts which fail as a result of misuse, improper application or improper installation.
5. Items not manufactured by Dometic, i.e., items which are purchased from another manufacturer and supplied as received by Dometic without alteration or modification except as any part of an Dometic-manufactured unit or component.
6. Components or parts used by or applied by the purchaser as an integral part of products not manufactured by Dometic.
7. Warranty does not cover damage to components that comprise a Custom Wrapped Box Evaporator refrigeration system (aka: catch boxes, fish boxes, etc.) when the box is installed in such a way that the customer can move it. These damages may include, but are not limited to: crimped refrigerant linesets (copper tubing or flexible linesets), refrigerant leaks, moisture ingression into the refrigeration system, subsequent damage to condensing unit from being operated with low refrigerant charge or moisture in the system, broken refrigerant connections, broken thermostat sensors, and/or broken constant pressure valves.

Installation and application of Dometic components is not warranted by Dometic because Dometic has no control or authority over the selection, location, application, or installation of these components.

Section III

What is the period of coverage?

See the Limited Warranty Periods, document # L-0694, for the period of coverage.

All Dometic components bear a data plate on which there are model and serial numbers. The serial number is date coded. To determine whether or not any Dometic component is in warranty, proceed as follows:

1. Determine the manufacture date of the component from the serial number on the data plate. If you are not familiar with the date code, write or call the Dometic Customer Service Department at (804)746-1313, to obtain the manufacture date. The hours of the Customer Service Department are 8:00 am - 5:00 pm (USA, Eastern Time Zone) Monday through Friday excluding holidays.

2. It is possible that there might exist a considerable time lag between the date a component is manufactured and the date it is put in service. In such instances, the date of manufacture could indicate that the item is out of warranty. However, based on the date the equipment is first put in service, the item may still be covered by the Dometic warranty described in **Section I**. For proof of date put in service, Dometic will require a copy of the bill of sale of the Dometic equipment from the installer or new boat dealer to the original owner.

Section IV

How do you get service? Please Read the following Warranty Procedure.

WARRANTY PROCEDURE

If the failure of a Dometic component is determined to be covered under the Dometic warranty and the time in service is determined to be within the warranty time limit, the owner has the following three options:

1. Preferred option: Have a Dometic authorized Servicing Dealer perform the work needed. The customer should call Dometic's Service Department for a recommendation as to the closest dealer. If the customer already knows an authorized servicing dealer, the dealer should be contacted directly.

2. If the customer contacts Dometic's Service Department for a Servicing Dealer and Dometic has no one in that particular area, Dometic will authorize the use of a local service company and Dometic will work with the local company to assist in any way possible.

3. The customer may send his equipment back to the factory to have the repair work done. Dometic will make every effort to return the equipment to the customer within a three week time period. If the claim represents a legitimate warranty problem, Dometic will pay the freight both ways. Dometic prefers option one and two, if at all possible.

The customer may contact the Dometic Service Department at (804) 746-1313.

WARNING

Dometic Environmental Corporation (Dometic) manufacturers of Cruisair, Grunert, Marine Air, Sentry and Tundra Products, makes the following safety warnings concerning the application, installation, use and care of its products. Although these warnings are extensive, there may be specific hazards which may arise out of circumstances which we have not outlined herein. Use this as a guide for developing an awareness of potential hazards of all kinds. Such an awareness will be a key factor in assuring your SAFETY and comfort.

ELECTRICITY - Many Dometic products operate on 115, 230 or 440 volt AC power. Such voltages can be LETHAL; therefore, the chassis, cabinets, bases, etc., on all components must be grounded together and connected to the vessel's grounding system. Sparks can occur as switches, thermostats and relays open and close in the normal operation of the equipment. Since this is the case, ventilating blowers for the removal of hazardous fumes or vapors should be operated at least 5 minutes before and during operation of any Dometic product or group of Dometic products. All electrical connections must be covered and protected so accidental contact cannot be made by persons using the equipment, as such contact could be LETHAL.

ELECTROLYSIS - Electrical leakage of any component can cause electrolytic deterioration (electrolysis) of thru-hull components which could result in leakage serious enough to sink a vessel which could result in loss of life. All Dometic components must be kept clean and dry and checked periodically for electrical leakage. If any electrical leakage is detected, the component should be replaced or the fault causing the leakage corrected before the component is put back into service.

GAS - CRUISAIR, MARINE AIR, GRUNERT and TUNDRA components utilize R-22 (Chlorodifluoromethane), R134a refrigerant (Tetrafluoroethane), R-407C (which contains Diflouromethane (HFC-32), Pentafluoroethane (HFC125), and 1.1.1.2 - Tetrafluoroethane (HFC134a)), R404A (R125/R143a/R134 (44%/52%/4%)), or R417a, which are non-toxic, non-flammable gases; however, these gases contain no oxygen and will not support life. Refrigerant gas tends to settle in the lowest areas of the compartment. If you experience a leak, evacuate all personnel, and ventilate area. Do not allow open flames in the area of leaks because refrigerant gas, when burned, decomposes into other potentially LETHAL gases. Refrigerant components operate at high pressure and no servicing should be attempted without gloves, long-sleeved clothing and eye protection. Liquid refrigerant gas can cause severe frost burns to the skin and eyes.

VENTILATION - To cool or heat air, CRUISAIR, MARINE AIR and GRUNERT components are designed to move air through a heat exchanger by a blower or propeller fan. This design necessarily produces a suction on one side of the air handling component and a pressure on the other side. Air handling components must be installed so that the suction-pressure action does not: (1) pressurize an area to the extent that structural failure occurs which could cause harm to occupants or bystanders, or (2) cause a suction or low pressure in an area where hydrogen gas from batteries, raw fuel vapor from fuel tanks, carbon monoxide from operating propulsion engines, power generators or heaters, methane gas from sewage holding tanks, or any other dangerous gas or vapor could exist. If an air handling unit is installed in such a manner that allows potentially lethal gases or vapors to be discharged by the air handling unit into the living space, this could result in loss of life.

Maximum protection against the introduction of dangerous gases or vapors into living spaces can be obtained by providing living spaces which are sealed from all other spaces by use of airtight bulkheads and decks, etc., and through the introduction of clean air into the living space. Bear in mind that the advent of air conditioning, whether it be for cooling or for heating, naturally leads to the practice of closing a living space tightly. Never close all windows and doors unless auxiliary ventilating systems, which introduce clean outside air into the living space, are used. Always leave enough window and door openings to provide adequate ventilation in the event potentially lethal gases or fumes should escape from any source.

CONDENSATE - All cooling units produce water condensate when operating on the cooling cycle. This water must be drained from the cooling unit overboard. If condensate is allowed to drip on a wooden structure, rotting or decay and structural failure may occur which could result in loss of life. If condensate is allowed to drip on electrical components, deterioration of the electrical components could result in hazardous conditions. When an air conditioning system is in operation, condensate drains may be subjected to negative pressure. Always locate condensate drains as far as possible from points where engine waste and other dangerous gases are exhausted so no such dangerous gases can be drawn into the condensate drains.

Warning

Never sleep in a closed area on a boat when any equipment, which functions as a result of the combustion of a volatile fuel, is in operation (such as engines, generators, power plants, or oil-fired heaters, etc.). At any time, the exhaust system of such devices could fail, resulting in a build-up of LETHAL gases within the closed area.

Warning Revised: 05-26-05

Limited Warranty Periods

Please read and keep this document with your important paperwork. Use it as a reference in the future. If you have any questions, please contact the Dometic Environmental Corporation Service Department at (804)746-1313 for clarification.

Note: Any model or replacement part that has been installed due to a warranty failure will carry **only** the remainder of the original warranty. All warranties begin when the customer takes possession of the equipment. The warranty is extended to all owners of the equipment commencing the date the original owner takes possession of it. Proof of original purchase may be required. **Fuses** and **MOV's** are used as safety devices to protect Cruisair equipment against over-current conditions caused by lightning or inductive switching environments. **These are not covered under warranty.** We reserve the right to change our warranty policies and procedures as well as our warranty allowances without notice.

Cruisair Direct Expansion (DX) and Modulating Systems

- New, complete system installation using any member of the SMX family.

  The warranty includes the pump.

  2 year warranty including Parts and Labor
- New, complete system installation using an electro-mechanical control (3-knob).

  The warranty includes the pump.

  1 year warranty including Parts and Labor
- New, complete model sold as a partial system retrofit to an existing system.

  Includes SMX family.

  1 year warranty including Parts and Labor

Cruisair Tempered Water

- New, complete system installation using any member of the SMX family.

  2 year warranty including Parts and Labor

  NOTE: Excludes pump which has a 1 year warranty
- New, complete model sold as a partial system retrofit to an existing system.

  Includes SMX family.

  1 year warranty including Parts and Labor

Sentry Battery Chargers

- New SM and FR series installation.

  2 year warranty including Parts and Labor
- New G-series installation.

  1 year warranty including Parts and Labor

Refrigerators/Freezers/Fish Boxes

The below warranty periods do not apply to systems that are installed as described in Section II, item #7, of the Owner's Limited Warranty, document # L-0123.

- New installation of entire system including condensing unit, line sets, evaporator, etc.

  1 year warranty including Parts and Labor
- New complete model sold as a partial system retrofit to an existing Cruisair system.

  1 year warranty including Parts and Labor
- New installation of condensing unit only, with line sets, evaporators, etc. done by others i.e. not Cruisair pre-charged line sets and evaporators.

  1 year warranty including parts and labor on mechanical and electrical parts of condensing unit only.

Replacement Parts

- Replacement parts and components - example: A-509, 40401-30.

  90 day warranty, Parts only
- Replacement Compressors for other than Tempered Water Systems - example: R3101-16T, DX equipment - installed in an existing Cruisair system or a competitor's system.

  1 year warranty including Parts and Labor
- Replacement compressors for Tempered Water - example: 30130-36 installed in an existing Cruisair system.

  1 year warranty including Parts and Labor
- A Tempered Water compressor - example: 30130-36 installed with competitor's equipment.

  90 day warranty, Parts only

* The box denotes the part of the warranty that pertains to this particular product.

Description of Drawings

Fig. 1 Mounting Your Sentry FR Charger In The Engine Room

Fig. 2 AC and DC Connections

(1) Battery #1 “+” (pos) Connection
(2) Battery #2 “+” (pos) Connection
(3) Battery #3 “+” (pos) Connection
(4) AC Connection From Power Panel
(5) All “—” (neg) Battery Connections
(6) Metal Shunt

Fig. 3 DC Sensing Wires Connections

(1) Single Battery Operation
(2) Multiple Battery Operation
(3) To Battery Bank(s)
(4) Metal Shunt

Fig. 4 Battery Charger Components

(1) Ammeter
(2) Full Charge Indicator Light
(3) Auto/Manual Switch
(4) AC Input Power Indicator Light
(5) Transformer
(6) 50/60 Hz Input Selector Switch (if included)
(7) Control Circuit
(8) DC Output Fuses
(9) Rectifying Circuit & Heat Sinks
(10) Resonating Capacitor
(11) 115/230 Volt Input Selector Switch (if included)
(12) AC Power Connections
(13) Ground Lug
(14) DC Battery “—” (neg) Connections
(15) DC Battery “+” (pos) Connections
(16) AC Input Fuse
(17) Metal Shunt

Fig. 5 Control Circuit Calibration

(1) Triac
(2) Potentiometer Pull-In
(3) Potentiometer Drop-Out

Fig. 6 Wiring Diagram

(1) Fan
(2) Heat Sink
(3) Blocking Diodes
(4) Rectifying Diodes
(5) Transformer
(6) Resonating Capacitor
(7) AC Power Connections
(8) Ground Lug
(9) “—” (neg) Battery Connection
(10) “+” (pos) Battery Connection
(11) Battery Sensing Wires
(12) Control Circuit
(13) AC Power Indicator
(14) Auto/Manual Selector Switch
(15) Full Charge Indicator
(16) Ammeter
(17) Control Panel

Fig.7- Spare Parts

Fig. 1

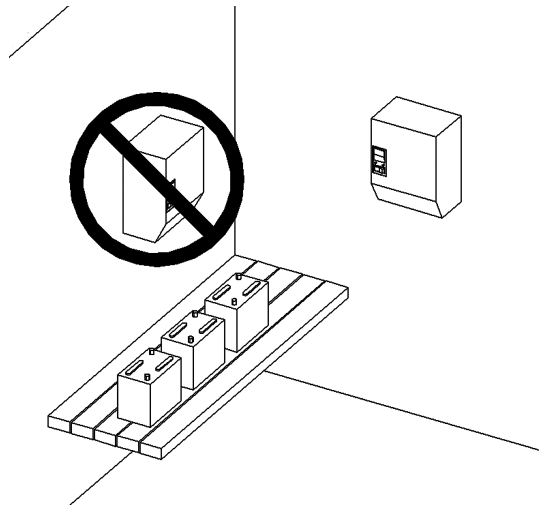

Fig. 2

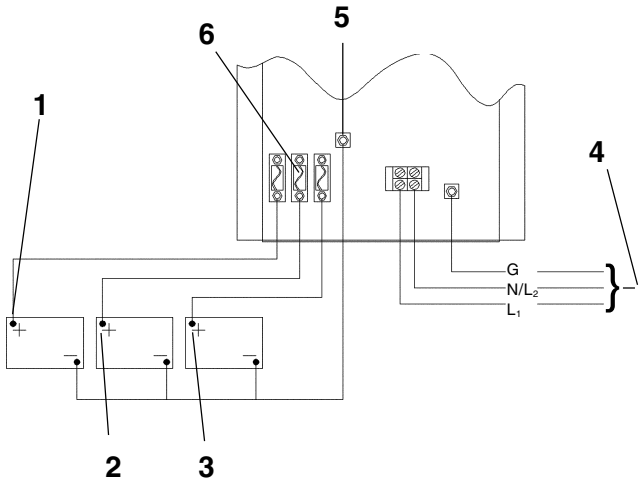

Fig. 3

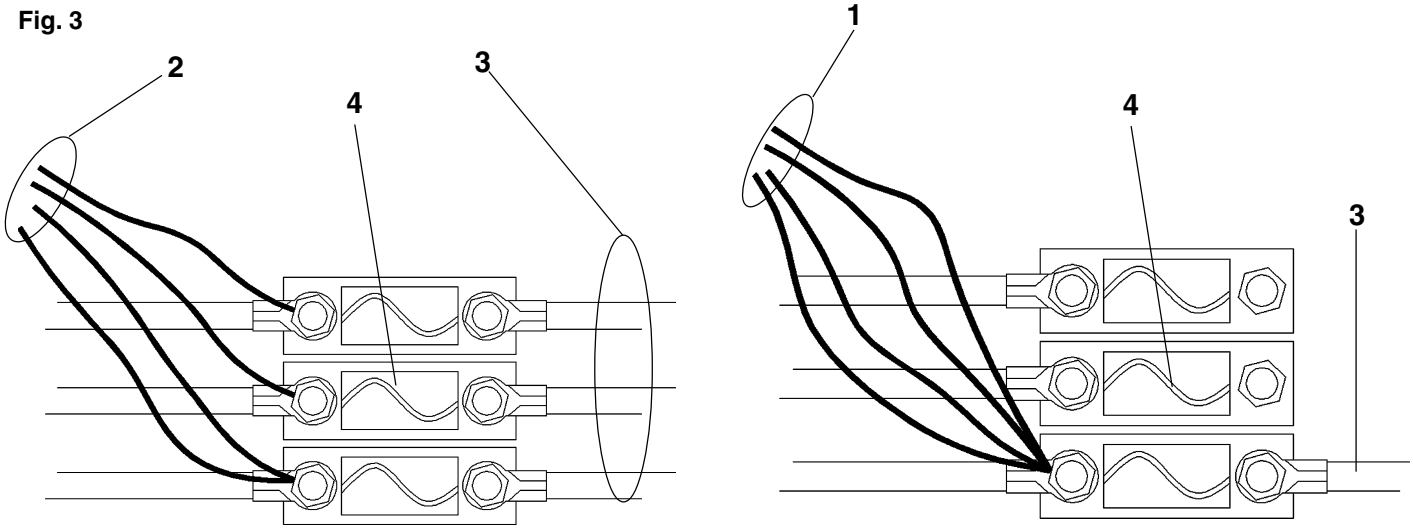

Fig.4

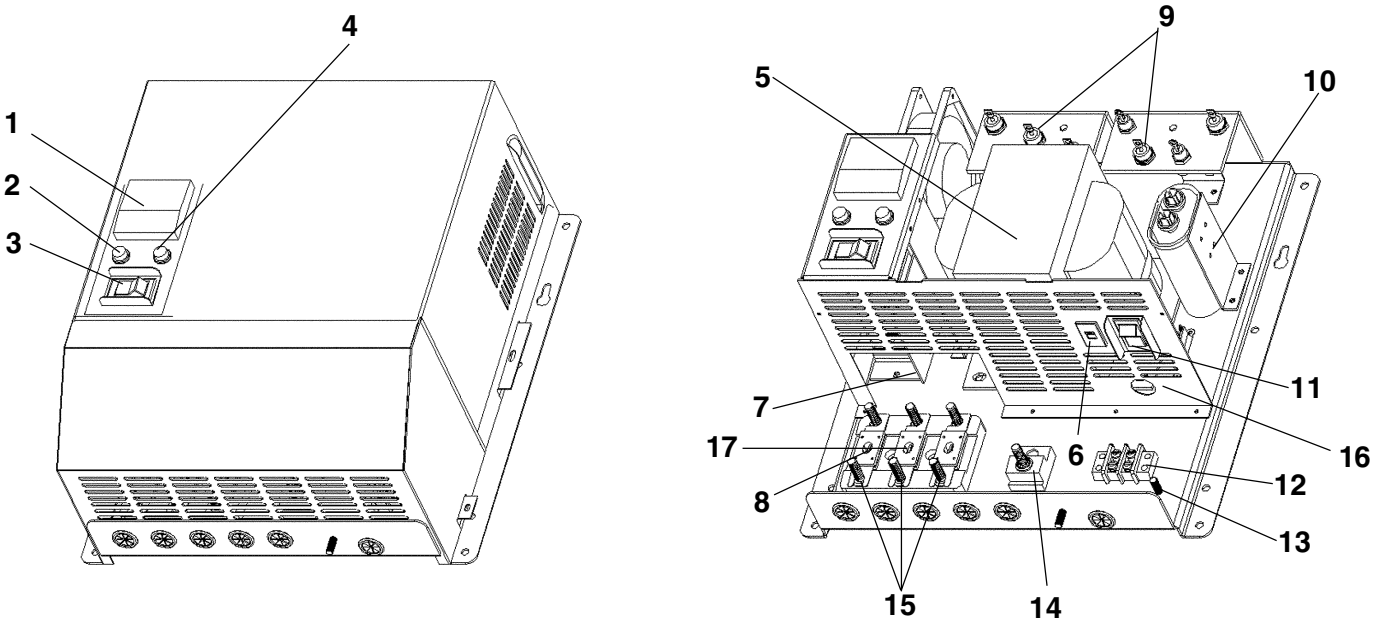

Fig.5

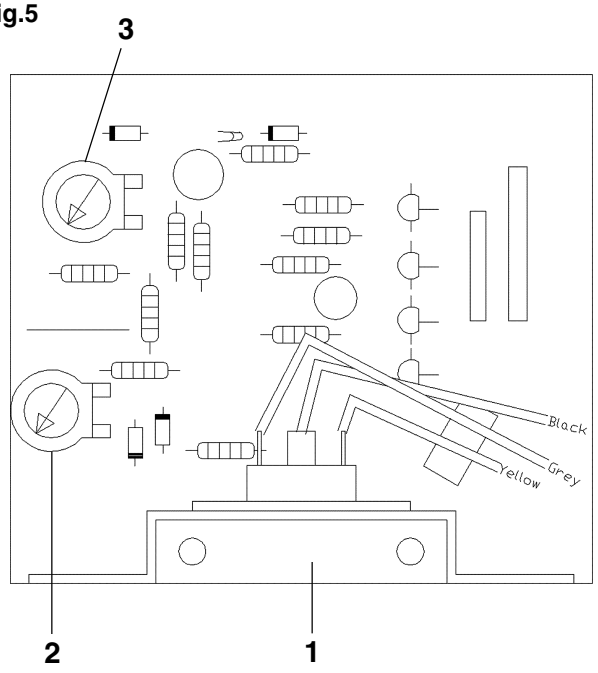

Fig.6

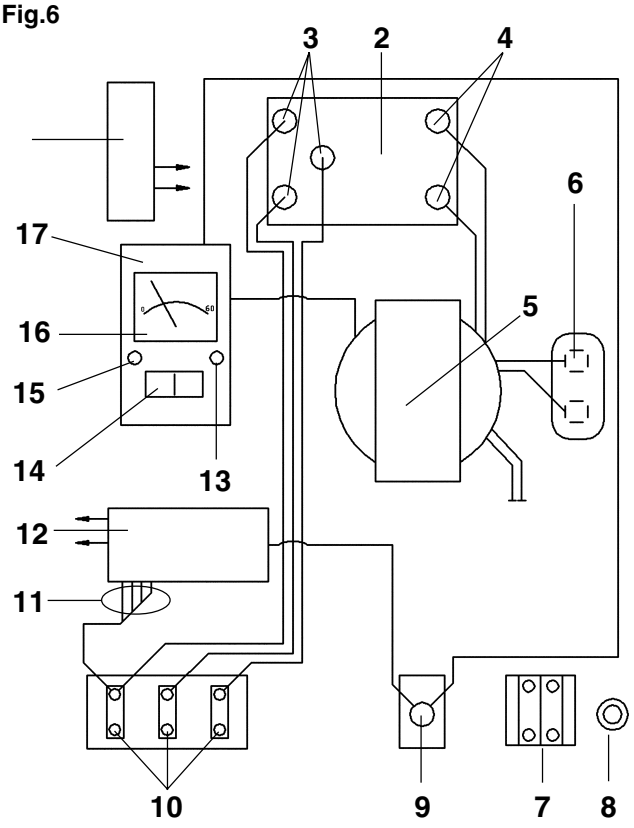

Fig.7

Spare Parts

Charger Model	Control Circuit	Cooling Fan	Rectifying Diode	Blocking Diode	Output Fuse	Auto Reset Circuit Breaker	AC Input Fuse
FR1220/3	G12NX	4030575	4180340 (2)	4180440 (3)	4122330	4123335	4120305
FR1240/3X	G12NX	4030575	4180340 (2)	4180440 (3)	4122050	4123350	4122810
FR1240A/3X	G12ANX	4030575	4180340 (2)	4180440 (3)	4122050	4123350	4122810
FR1240/3XJ	G12NX	4030575	4180440 (2)	4180440 (3)	4122050	4123350	4122810
FR1260/3X	G12NX	4030575	4181060 (2)	4181160 (3)	4121780	4123480	4122815
FR1260/4X	G12NX	4030575	4181060 (2)	4181160 (3)	4121780	4123480	4122815
FR1260A/3X	G12ANX	4030555	4181060 (2)	4181160 (3)	4121780	4123480	4122815
FR2425/3X	G24NX	4030575	4180340 (2)	4180440 (3)	4122740	4123340	4122810
FR2425A/3X	G24ANX	4030575	4180340 (2)	4180440 (3)	4122740	4123340	4122810
FR2440/3X	G24NX	4030555	4180340 (2)	4180440 (3)	4122050	4123350	4122815
FR2440A/3X	G24NX	4030555	4180340 (2)	4180440 (3)	4122050	4123350	4122815
FR2440/3XJ	G24NX	4030555	4180440 (2)	4180440 (3)	4122050	4123350	4122815
FR2460/3XJ	G24NX	4030555	4181160 (2)	4181160 (3)	4121780	4123480	4122820
FR2460/4XJ	G24NX	4030555	4181160 (2)	4181160 (3)	4121780	4123480	4122820
FR3230/3X	G32NX	4030555	4180340 (2)	4180440 (3)	4122740	4123345	4122820

Cruisair Worldwide Service Dealer Locator

The majority of the service listings displayed for the United States are key members of the national Cruisair distributor or master dealer network. If you need service, please contact the closest company shown. In most cases they will direct you to a local dealer or service port. We have over 500 Cruisair dealers in the national Cruisair network, and one should be convenient to you.

The **international** companies listed are, in many cases, distributors and are capable of managing the majority of service requests for the countries listed. In some cases they will refer you to a local dealer.

You may also contact us directly via the web site or call us in the US at (804) 746-1313.

For a complete and up-to-date Dealer locator list, please visit our website at http://www.cruisair.com/cruisair/dealer.html

USA

AAP Inc.
Location: Milford, VA, USA
Territory: National Coach & Mobile Products Only
Phone: 804-633-9454
Fax: 804-633-5499
Web: www.aap.com

Alabama

A.E.R. Supply, Inc.
Location: Seabrook, TX, USA
Phone: 281-474-3276
Fax: 281-474-2714
E-mail: rsmiller@aersupply.com

Thom Chase Heating and A/C
Location: Chattanooga, TN, USA
Territory: Northern Alabama, Northern Mississippi, Tennessee, Western Kentucky
Phone: 423-344-6356
Fax: 423-344-6356
E-mail: thomchase@aol.com

Alaska

Southern California Marine Enterprises
Location: San Diego, CA, USA
Phone: 619-224-2869
Fax: 619-226-0496
E-mail: sales@southerncalmarine.com
Web: www.southerncalmarine.com

Arizona

Southern California Marine Enterprises
Location: San Diego, CA, USA
Phone: 619-224-2869
Fax: 619-226-0496
E-mail: sales@southerncalmarine.com
Web: www.southerncalmarine.com

Arkansas

A.E.R. Supply, Inc.
Location: Seabrook, TX, USA
Phone: 281-474-3276
Fax: 281-474-2714
E-mail: rsmiller@aersupply.com

California

Southern California Marine Enterprises
Location: San Diego, CA, USA
Phone: 619-224-2869
Fax: 619-226-0496
E-mail: sales@southerncalmarine.com
Web: www.southerncalmarine.com

Colorado

A.E.R. Supply, Inc.
Location: Seabrook, TX, USA
Phone: 281-474-3276
Fax: 281-474-2714
E-mail: rsmiller@aersupply.com

Connecticut

GDL Services, LLC
Location: Clinton, CT, USA
Territory: Connecticut River Area
Phone: 860-669-5179
Fax: 860-669-5806

Nautical Air, Inc.
Location: Copiague, NY, USA
Territory: CT, DE (N. of Sassafras River), IO, IL, MD (N.of Baltimore), NJ, NY, PA, OH, RI,
Phone: 631-956-3456
Fax: 631-956-3479
E-mail: sales@nauticalair.com
Web: www.nauticalair.com

Delaware

Annapolis Cruisair
Location: Annapolis, MD, USA
Territory: In Md: Baltimore & Areas South; In Delaware: South of the Sassafras River
Phone: 410-224-0970
Fax: 410-224-0050
E-mail: cruisair45@aol.com

Nautical Air, Inc.
Location: Copiague, NY, USA
Territory: CT, DE (N. of Sassafras River), IO, IL, MD (N.of Baltimore), NJ, NY, PA, OH, RI,
Phone: 631-956-3456
Fax: 631-956-3479
E-mail: sales@nauticalair.com
Web: www.nauticalair.com

Florida

Cruisair Southeast, A Division of T.K. Alley, Inc.
Location: Dania, FL, USA
Territory: Southeast Florida
Phone: 954-920-0300
Fax: 954-920-0301
E-mail: tkalley@aol.com
Web: www.cruisair-southeast.com

Cruisair Suncoast, Inc.
Location: St. Petersburg, FL, USA
Territory: Tampa, St. Petersburg and surrounding areas
Phone: 727-526-7875
Fax: 727-528-9519
E-mail: cruisairsuncoast@yahoo.com

Ward's Marine Electric, Inc.
Location: Ft. Lauderdale, FL, USA
Territory: Battery Chargers Only
Phone: 954-523-2815
Fax: 954-523-1967
E-mail: info@wardsmarine.com

Georgia

Beard Marine/Savannah
Location: Savannah, GA, USA
Phone: (912) 356-5222
Fax: (912) 692-1006
E-mail: lpstorkbms@aol.com

Hawaii

Southern California Marine Enterprises
Location: San Diego, CA, USA
Phone: 619-224-2869
Fax: 619-226-0496
E-mail: sales@southerncalmarine.com
Web: www.southerncalmarine.com

Idaho

Sure Marine Services Inc.
Location: Seattle, WA, USA
Phone: 206 -784-9903
Fax: 206-784-0506
E-mail: sales@suremarine.com

Illinois

J & S Marine Sales & Service
Location: Detroit, MI, USA
Phone: (586) 463-3400
Fax: (586) 463-1792
E-mail: jandsmarine@sbcglobal.net
Web: www.jandsmarine.com

Midwest Marine Supply
Location: St. Clair Shores, MI, USA
Phone: 586-778-8950
Fax: 586-778-6108

Nautical Air, Inc.
Location: Copiague, NY, USA
Territory: CT, DE (N. of Sassafras River), IO, IL, MD (N.of Baltimore), NJ, NY, PA, OH, RI,
Phone: 631-956-3456
Fax: 631-956-3479
E-mail: sales@nauticalair.com
Web: www.nauticalair.com

Indiana

J & S Marine Sales & Service
Location: Detroit, MI, USA
Phone: (586) 463-3400
Fax: (586) 463-1792
E-mail: jandsmarine@sbcglobal.net
Web: www.jandsmarine.com

Midwest Marine Supply
Location: St. Clair Shores, MI, USA
Phone: 586-778-8950
Fax: 586-778-6108

Nautical Air, Inc.
Location: Copiague, NY, USA
Territory: CT, DE (N. of Sassafras River), IO, IL, MD (N.of Baltimore), NJ, NY, PA, OH, RI,
Phone: 631-956-3456
Fax: 631-956-3479
E-mail: sales@nauticalair.com
Web: www.nauticalair.com

Iowa

J & S Marine Sales & Service
Location: Detroit, MI, USA
Phone: (586) 463-3400
Fax: (586) 463-1792
E-mail: jandsmarine@sbcglobal.net
Web: www.jandsmarine.com

Iowa

Midwest Marine Supply
Location: St. Clair Shores, MI, USA
Phone: 586-778-8950
Fax: 586-778-6108

Nautical Air, Inc.
Location: Copiague, NY, USA
Territory: CT, DE (N. of Sassafras River), IO, IL, MD (N.of Baltimore), NJ, NY, PA, OH, RI,
Phone: 631-956-3456
Fax: 631-956-3479
E-mail: sales@nauticalair.com
Web: www.nauticalair.com

Kansas

A.E.R. Supply, Inc.
Location: Seabrook, TX, USA
Phone: 281-474-3276
Fax: 281-474-2714
E-mail: rsmiller@aersupply.com

Kentucky

Thom Chase Heating and A/C
Location: Chattanooga, TN, USA
Territory: Northern Alabama, Northern Mississippi, Tennessee, Western Kentucky
Phone: 423-344-6356
Fax: 423-344-6356
E-mail: thomchase@aol.com

Louisiana

A.E.R. Supply, Inc.
Location: Seabrook, TX, USA
Phone: 281-474-3276
Fax: 281-474-2714
E-mail: rsmiller@aersupply.com

Sea Chest Marine Distr.
Location: New Orleans, LA, USA
Territory: Gulf Coast (LA & MS)
Phone: 800-535-8630
Fax: 504-288-1758

Maryland

Annapolis Cruisair
Location: Annapolis, MD, USA
Territory: In Md: Baltimore & Areas South; In Delaware: South of the Sassafras River
Phone: 410-224-0970
Fax: 410-224-0050
E-mail: cruisair45@aol.com

Maryland (N of Baltimore)

Nautical Air, Inc.
Location: Copiague, NY, USA
Territory: CT, DE (N. of Sassafras River), IO, IL, MD (N.of Baltimore), NJ, NY, PA, OH, RI,
Phone: 631-956-3456
Fax: 631-956-3479
E-mail: sales@nauticalair.com
Web: www.nauticalair.com

Massachusetts

World Wide Enterprises
Location: Cape Cod, MA, USA
Phone: 508-540-0963

Michigan

J & S Marine Sales & Service
Location: Detroit, MI, USA
Phone: (586) 463-3400
Fax: (586) 463-1792
E-mail: jandsmarine@sbcglobal.net
Web: www.jandsmarine.com

Midwest Marine Supply
Location: St. Clair Shores, MI, USA
Phone: 586-778-8950
Fax: 586-778-6108

Minnesota

Midwest Cruisair
Location: Red Wing, MN, USA
Territory: Minnesota and Western Wisconsin
Phone: 651-388-4881
Fax: 651-388-9186
E-mail: estelter@redwing.net

Mississippi

A.E.R. Supply, Inc.
Location: Seabrook, TX, USA
Phone: 281-474-3276
Fax: 281-474-2714
E-mail: rsmiller@aersupply.com

Sea Chest Marine Distr.
Location: New Orleans, LA, USA
Territory: Gulf Coast (LA & MS)
Phone: 800-535-8630
Fax: 504-288-1758

Thom Chase Heating and A/C
Location: Chattanooga, TN, USA
Territory: Northern Alabama, Northern Mississippi, Tennessee, Western Kentucky
Phone: 423-344-6356
Fax: 423-344-6356
E-mail: thomchase@aol.com

Missouri

A.E.R. Supply, Inc.
Location: Seabrook, TX, USA
Phone: 281-474-3276
Fax: 281-474-2714
E-mail: rsmiller@aersupply.com

Montana

Sure Marine Services Inc.
Location: Seattle, WA, USA
Phone: 206 -784-9903
Fax: 206-784-0506
E-mail: sales@suremarine.com

Nebraska

A.E.R. Supply, Inc.
Location: Seabrook, TX, USA
Phone: 281-474-3276
Fax: 281-474-2714
E-mail: rsmiller@aersupply.com

Nevada

A.E.R. Supply, Inc.
Location: Seabrook, TX, USA
Phone: 281-474-3276
Fax: 281-474-2714
E-mail: rsmiller@aersupply.com

Southern California Marine Enterprises
Location: San Diego, CA, USA
Phone: 619-224-2869
Fax: 619-226-0496
E-mail: sales@southerncalmarine.com
Web: www.southerncalmarine.com

New Jersey

Nautical Air, Inc.
Location: Copiague, NY, USA
Territory: CT, DE (N. of Sassafras River), IO, IL, MD (N.of Baltimore), NJ, NY, PA, OH, RI,
Phone: 631-956-3456
Fax: 631-956-3479
E-mail: sales@nauticalair.com
Web: www.nauticalair.com

New Mexico

A.E.R. Supply, Inc.
Location: Seabrook, TX, USA
Phone: 281-474-3276
Fax: 281-474-2714
E-mail: rsmiller@aersupply.com

New York

Nautical Air, Inc.
Location: Copiague, NY, USA
Territory: CT, DE (N. of Sassafras River), IO, IL, MD (N.of Baltimore), NJ, NY, PA, OH, RI,
Phone: 631-956-3456
Fax: 631-956-3479
E-mail: sales@nauticalair.com
Web: www.nauticalair.com

North Carolina

Martin's Marine
Location: Wilmington, NC, USA
Territory: North Carolina and Myrtle Beach, SC
Phone: 910-799-9362
Fax: 910-793-4267

North Dakota

A.E.R. Supply, Inc.
Location: Seabrook, TX, USA
Phone: 281-474-3276
Fax: 281-474-2714
E-mail: rsmiller@aersupply.com

Ohio

Nautical Air, Inc.
Location: Copiague, NY, USA
Territory: CT, DE (N. of Sassafras River), IO, IL, MD (N.of Baltimore), NJ, NY, PA, OH, RI,
Phone: 631-956-3456
Fax: 631-956-3479
E-mail: sales@nauticalair.com
Web: www.nauticalair.com

Oklahoma

A.E.R. Supply, Inc.
Location: Seabrook, TX, USA
Phone: 281-474-3276
Fax: 281-474-2714
E-mail: rsmiller@aersupply.com

Oregon

Sure Marine Services Inc.
Location: Seattle, WA, USA
Phone: 206 -784-9903
Fax: 206-784-0506
E-mail: sales@suremarine.com

Pennsylvania

Nautical Air, Inc.
Location: Copiague, NY, USA
Territory: CT, DE (N. of Sassafras River), IO, IL, MD (N.of Baltimore), NJ, NY, PA, OH, RI,
Phone: 631-956-3456
Fax: 631-956-3479
E-mail: sales@nauticalair.com
Web: www.nauticalair.com

Rhode Island

Cay Electronics
Location: Portsmouth, Rhode Island, USA
Territory: Rhode Island
Phone: 401-683-3520
Fax: 401-683-3633
Web: www.cayelectronics.com

Nautical Air, Inc.
Location: Copiague, NY, USA
Territory: CT, DE (N. of Sassafras River), IO, IL, MD (N.of Baltimore), NJ, NY, PA, OH, RI,
Phone: 631-956-3456
Fax: 631-956-3479
E-mail: sales@nauticalair.com
Web: www.nauticalair.com

South Carolina

Atlantic Boat ACR
Location: Charleston, SC, USA
Phone: 888-529-0122
Fax: 843-529-0101
E-mail: info@atlanticboatacr.com
Web: www.atlanticboatacr.com

Martin's Marine
Location: Wilmington, NC, USA
Territory: North Carolina and Myrtle Beach, SC
Phone: 910-799-9362
Fax: 910-793-4267

South Dakota

A.E.R. Supply, Inc.
Location: Seabrook, TX, USA
Phone: 281-474-3276
Fax: 281-474-2714
E-mail: rsmiller@aersupply.com

Tennessee

Thom Chase Heating and A/C
Location: Chattanooga, TN, USA
Territory: Northern Alabama, Northern Mississippi, Tennessee, Western Kentucky
Phone: 423-344-6356
Fax: 423-344-6356
E-mail: thomchase@aol.com

Texas

A.E.R. Supply, Inc.
Location: Seabrook, TX, USA
Phone: 281-474-3276
Fax: 281-474-2714
E-mail: rsmiller@aersupply.com

Utah

A.E.R. Supply, Inc.
Location: Seabrook, TX, USA
Phone: 281-474-3276
Fax: 281-474-2714
E-mail: rsmiller@aersupply.com

Southern California Marine Enterprises
Location: San Diego, CA, USA
Phone: 619-224-2869
Fax: 619-226-0496
E-mail: sales@southerncalmarine.com
Web: www.southerncalmarine.com

Virginia

Lamy Marine, Inc.
Location: Chesapeake, VA, USA
Phone: 757-494-3747
Fax: 757-494-3740
E-mail: lamy.marine@verizon.net

Washington

Sure Marine Services Inc.
Location: Seattle, WA, USA
Phone: 206 -784-9903
Fax: 206-784-0506
E-mail: sales@suremarine.com

Wisconsin (East)

J & S Marine Sales & Service
Location: Detroit, MI, USA
Phone: (586) 463-3400
Fax: (586) 463-1792
E-mail: jandsmarine@sbcglobal.net
Web: www.jandsmarine.com

Midwest Marine Supply
Location: St. Clair Shores, MI, USA
Phone: 586-778-8950
Fax: 586-778-6108

Wisconsin (West)

Midwest Cruisair
Location: Red Wing, MN, USA
Territory: Minnesota and Western Wisconsin
Phone: 651-388-4881
Fax: 651-388-9186
E-mail: estelter@redwing.net

Wyoming

A.E.R. Supply, Inc.
Location: Seabrook, TX, USA
Phone: 281-474-3276
Fax: 281-474-2714
E-mail: rsmiller@aersupply.com

Angola

Southern Power Products
Location: Cape Town, South Africa
Phone: 27-21-511-0653
Fax: 27-21-510-3049
E-mail: sales@southernpower.co.za

Antigua

Aboard Refrigeration
Location: English Harbour, Antigua
Phone: 268-460-1690
Fax: 419-858-0544
E-mail: aboardrf@candw.ag

The Signal Locker
Location: English Harbour, Antigua
Phone: 268-460-1528
Fax: 268-460-1148
E-mail: lockers@candw.ag

Argentina

Trimer S.A.
Location: Buenos Aires, Argentina
Phone: 5411-4580-0444
Fax: 5411-4580-0440
E-mail: trimer@trimer.com.ar
Web: www.trimer.ar

Australia

Seabreeze Industries
Location: Coomera, Queensland, Australia
Phone: 61-7-55806371
Fax: 61-7-55806372
E-mail: seabreez@bigpond.net.au
Web: www.seabreeze-industries.com.au

Austria

Dometic Marine – Italy, Sales Company
Location: Milano, Italy
Phone: 39 0362 44182
Fax: 39 0362 452226
E-mail: marine.info@dometic.it

Nautica Centis di Nespolo Cinzia & C. Sne
Location: Bevazzana de Latisana (UD), Italy
Territory: Northeast Italy, Austria, Croatia, Slovenia
Phone: 390-431-53-644
Fax: 390-431-53-460
E-mail: nautica.centis@nauticacentis.it
Web: www.nauticacentis.it

Bahamas

Freezing Point, Ltd.
Location: Nassau, Bahamas
Phone: 242-325-3589
Fax: 242-356-5271
E-mail: freezingpoint@bahamas.net.bs

Nixon's Refrigeration
Location: Abaco, Bahamas
Territory: Abaco Island only
Phone: 242-367-5219
Fax: 242-367-5219
E-mail: seannixon@email.com

Bahrain

Mantech
Location: Dubai, United Arab Emirates
Phone: 971 4 333 25 42
Fax: 971 4 333 06 49
E-mail: mge@emirates.net.ae

Bangladesh

Tritex Equipment Pte. Ltd.
Location: , Singapore
Phone: (65) 6861 1188
Fax: (65) 6861 4263, (65) 6861 8797
E-mail: sales@tritex.com.sg
Web: www.tritex.com.sg

Belgium

Eberca
Location: , Netherlands
Phone: 31 186621955
Fax: 31 186621818
E-mail: info@eberca.nl

Bermuda

Flatt's Marine
Location: St. Georges, Bermuda
Phone: 441-293-5740
Fax: 441-293-5740

Botswana

Southern Power Products
Location: Cape Town, South Africa
Phone: 27-21-511-0653
Fax: 27-21-510-3049
E-mail: sales@southernpower.co.za

Brazil

Marine Express
Location: Sao Paulo, Brazil
Phone: 55-11-5182-7166
Fax: 55-11-5183-3636
E-mail: fabrizio@marinexpress.com.br
Web: www.marinexpress.com.br

Sailing Products
Location: Rio de Janeiro, Brazil
Phone: 55 (0) 21 3154-9990
Fax: 55 (0) 21 2494-7223
E-mail: sailing@sailing.com.br

Sailing Products
Location: Sao Paulo, Brazil
Phone: 55 (0) 11 81 1985
Fax: 55 (0) 11 81 1936

British Virgin Islands

Cay Electronics Ltd.
Location: Tortola, British Virgin Islands
Phone: 284-494-2400
Fax: 284-494-5389
E-mail: caybvi@candwbvi.net
Web: www.cayelectronics.com

Parts And Power
Location: Tortola, British Virgin Islands
Phone: 284-494-2830
Fax: 284-494-1584
E-mail: partspwr@surfbvi.com

British West Indies

Caribbean Marine & Diesel
Location: Turks and Caicos Islands, British West Indies
Phone: 649-941-5903
Fax: 649-941-5902
E-mail: caribmarinediesel@tciway.tc

Marine Power
Location: Grand Cayman Island, British West Indies
Phone: 345-947-1945
Fax: 345-947-1909
E-mail: mpower@candw.ky

Canada

British Columbia

Accutemp Refrigeration and Air Conditioning
Location: Victoria, BC, Canada
Territory: Western Canada
Phone: 250-475-2665
Fax: 250-475-1957
E-mail: info@accutemp.ca
Web: www.accutemp.ca

Airon Heating And Air Conditioning
Location: Richmond, BC, Canada
Territory: Western Canada
Phone: 604-270-2040
Fax: 604-270-3888
E-mail: dmairon@telus.net
Web: www.aironhvac.com

Ontario

J & S Marine Sales & Service
Location: Detroit, MI, USA
Phone: (586) 463-3400
Fax: (586) 463-1792
E-mail: jandsmarine@sbcglobal.net
Web: www.jandsmarine.com

Northland Supply Company
Location: Queensville, ON, Canada
Phone: 905-478-2244
Fax: 905-478-2295
E-mail: norsupco@aol.com
Web: www.norsupco.com

Caribbean Islands

Aboard Refrigeration
Location: English Harbour, Antigua
Phone: 268-460-1690
Fax: 419-858-0544
E-mail: aboardrf@candw.ag

Agencias Navieras B&R S.A.
Location: Santo Domingo, Dominican Republic
Territory: Dominican Republic
Phone: 809-562-3353
Fax: 809-562-3383
E-mail: hsosa@navierasbr.com

C.S. Services
Location: Martinique, French West Indies
Phone: 596-749113
Fax: 596-749174

Caribbean Marine & Diesel
Location: Turks and Caicos Islands, British West Indies
Phone: 649-941-5903
Fax: 649-941-5902
E-mail: caribmarinediesel@tciway.tc

Cay Electronics Ltd.
Location: Tortola, British Virgin Islands
Phone: 284-494-2400
Fax: 284-494-5389
E-mail: caybvi@candwbvi.net
Web: www.cayelectronics.com

Centro Cruisair de Puerto Rico
Location: Santurce, Puerto Rico
Phone: 787-727-3637
Fax: 787-727-3637

Cool-Tech Air Conditioning
Location: Fajardo, Puerto Rico
Phone: (787) 860-2615
Fax: (787) 801-2050
E-mail: cooltech@isppr.net

Coral Bay Marine Service
Location: St. John, U.S. Virgin Islands
Phone: 340-776-6859
Fax: 340-776-6859

Dr. Ice
Location: St. Thomas, US Virgin Islands
Territory: St. Thomas
Phone: 340-775-4540
Fax: 340-775-6575
E-mail: lastlaugh44@pennswoods.net

Enertech N.V.
Location: Simpson Bay, St. Maarten/St. Martin, Netherland Antilles
Phone: 599-551-2145
Fax: 305-675-5857 (USA)
E-mail: service@enertechnv.com
Web: www.enertechnv.com

First Needs Co.
Location: Curacao, Netherlands Antilles
Phone: 599 966 69139
Fax: 599 976 79003
E-mail: hcraft@attglobal.net
Web: www.firstneedscuracao.com

Freezing Point, Ltd.
Location: Nassau, Bahamas
Phone: 242-325-3589
Fax: 242-356-5271
E-mail: freezingpoint@bahamas.net.bs

Iceberg Refrigeration
Location: Guadeloupe, French West Indies
Phone: 590-24 35 35
Fax: 590-24 35 35
E-mail: iceberg.refrigeration@wanadoo.fr

Marine Power
Location: Grand Cayman Island, British West Indies
Phone: 345-947-1945
Fax: 345-947-1909
E-mail: mpower@candw.ky

May Day Marine
Location: San Juan, Puerto Rico
Territory: Puerto Rico, Dominican Republic
Phone: 787-720-9628
Fax: 787-790-2551

Nau-T-Kol Marine Refrigeration
Location: Chaguaramas, Trinidad
Phone: 868-634-2174
Fax: 868-634-2174
E-mail: nautkol@cablenett.net
Web: www.nautkol.com

Nixon's Refrigeration
Location: Abaco, Bahamas
Territory: Abaco Island only
Phone: 242-367-5219
Fax: 242-367-5219
E-mail: seannixon@email.com

Outfitters International
Location: St. Georges, Grenada
Phone: 473-440-7949
Fax: 473-440-6680
E-mail: footloos@caribsurf.com

Parts And Power
Location: Tortola, British Virgin Islands
Phone: 284-494-2830
Fax: 284-494-1584
E-mail: partspwr@surfbvi.com

Reefco
Location: St. Thomas, U.S. Virgin Islands
Phone: 340-776-0038
Fax: 340-776-0038
E-mail: dennyedy@viaccess.net

Regis Electronics (St Lucia) LTD.
Location: St. Lucia, West Indies
Phone: 758-452-0205
Fax: 758-452-0206
E-mail: stlucia@regiselectronics.com

St. Croix Marine Corp.
Location: St. Croix, U.S. Virgin Islands
Phone: 340-773-0289
Fax: 340-778-8974
E-mail: stcroixmarine@hotmail.com

Sun Cool Air Conditioning Copr
Location: Carolina, Puerto Rico
Phone: 787-791-6971
Fax: 787-791-3885
E-mail: suncool1@coqui.net

Technical House (E.T.S. Inc.)
Location: San Juan, Puerto Rico
Territory: Sentry Battery Chargers Only
Phone: 787-781-1313
Fax: 787-781-2020
E-mail: jdonato@technicalhouse.com
Web: www.technicalhouse.com

The Signal Locker
Location: English Harbour, Antigua
Phone: 268-460-1528
Fax: 268-460-1148
E-mail: lockers@candw.ag

China

Chi-Mo Inc.
Location: Shanghai, China
Phone: 8621-5917-1111
Fax: 8621-5917-1166
E-mail: sales@springfieldmarine.com.cn
Web: www.springfieldmarine.com.cn

Tritex Equipment (H.K.) Ltd
Location: Shanghai, Beijing, Guangzhou, Wuhan, China
Phone: 8621-5240-2638
Fax: 8621-5240-2153
E-mail: tritex@public.sta.net.cn
Web: www.tritex.com.sg

Tritex Equipment Pte. Ltd.
Location: , Singapore
Phone: (65) 6861 1188
Fax: (65) 6861 4263, (65) 6861 8797
E-mail: sales@tritex.com.sg
Web: www.tritex.com.sg

Costa Rica

Gato Frío
Location: Playa Jaco, Costa Rica
Territory: Costa Rica, Panama
Phone: 506-637-7181
Fax: 506-637-7180
E-mail: eric@yachtshare.net

Metro Marine
Location: Herradura Bay, Costa Rica
Phone: 506-643-2409
Fax: 506-643-2409
Web: marinemetro@racsa.co.cr

Croatia

Dometic Marine – Italy, Sales Company
Location: Milano, Italy
Phone: 39 0362 44182
Fax: 39 0362 452226
E-mail: marine.info@dometic.it

Nautica Centis di Nespolo Cinzia & C. Sne
Location: Bevazzana de Latisana (UD), Italy
Territory: Northeast Italy, Austria, Croatia, Slovenia
Phone: 390-431-53-644
Fax: 390-431-53-460
E-mail: nautica.centis@nauticacentis.it
Web: www.nauticacentis.it

Cyprus

Dometic Marine - United Kingdom, Sales Company
Location: Poole, Dorset, United Kingdom
Phone: 44 (0) 870 3306101
Fax: 44 (0) 870 3306102
E-mail: sales@dometicmarine.com
Web: www.dometic.com

Tuti Mare Trading Ltd
Location: Limassol, Cyprus
Phone: 35 725 431313
Fax: 35 725 431300

Dominican Republic

Agencias Navieras B&R S.A.
Location: Santo Domingo, Dominican Republic
Territory: Dominican Republic
Phone: 809-562-3353
Fax: 809-562-3383
E-mail: hsosa@navierasbr.com

May Day Marine
Location: San Juan, Puerto Rico
Territory: Puerto Rico, Dominican Republic
Phone: 787-720-9628
Fax: 787-790-2551

Ecuador

Navas-Bustos Representaciones
Location: Guayaquil, Equador
Phone: 593-2-252542
Fax: 593-2-251-421

Egypt

Climate Company
Location: Cairo, Egypt
Phone: 20-2-2598092
Fax: 20-2-4523028
E-mail: climate@tedata.net.eg

Eritrea

DM Electrical Engineering
Location: Asmara, Eritrea
Phone: 291-1-126737
Fax: 291-1-127650

France

Dometic Marine - France, Sales Company
Location: 60 128 Plailly, France
Phone: Cell: 0033 (0)680 415 543
Fax: 0033 (0)344 633 518
E-mail: marine.sales@dometic.fr

Polymarine Distribution
Location: Cannet, Rocheville, France
Phone: 0033 493463634
Fax: 0033 493463634
E-mail: polymarine.bayle@free.fr

French West Indies

C.S. Services
Location: Martinique, French West Indies
Phone: 596-749113
Fax: 596-749174

Iceberg Refrigeration
Location: Guadeloupe, French West Indies
Phone: 590-24 35 35
Fax: 590-24 35 35
E-mail: iceberg.refrigeration@wanadoo.fr

Germany

GEMO GmbH
Location: Travemunde, Germany
Phone: 49-4502-2466
Fax: 49-4502-2425
E-mail: gemo_gmbh@t-online.de
Web: www.gemo_online.de

Greece

Dometic Marine - United Kingdom, Sales Company
Location: Poole, Dorset, United Kingdom
Phone: 44 (0) 870 3306101
Fax: 44 (0) 870 3306102
E-mail: sales@dometicmarine.com
Web: www.dometic.com

Polfrost Technical Ltd.
Location: Piraeus, Greece
Phone: 30-210-461-3370
Fax: 30-210-461-4376

Athens

Aegean Diesel Electric LT
Location: , Piraeus, Greece
Phone: 3014222484
Fax: 3014175201
E-mail: info@ade-marine.gr

Grenada

Outfitters International
Location: St. Georges, Grenada
Phone: 473-440-7949
Fax: 473-440-6680
E-mail: footloos@caribsurf.com

Guam

Fentress Refrigeration Service Co.
Location: Tamuning, Guam
Phone: 671-565-4038
Fax: 671-565-3315

Guatemala

Automotores y Marina, S.A.
Location: Villa Nueva, Guatemala
Phone: 502-6631-2033
Fax: 502-6631-2034
E-mail: info@automotoresymarina.com

Hong Kong

Astral Marine, Ltd.
Location: Sai Kung, NT, Hong Kong
Phone: 852-271 959 82
Fax: 852-219 444 63
E-mail: funcle@pacific.net.hk
Web: www.astral.com.hk

Tritex Equipment (H.K.) Ltd.
Location: Kowloon, Hong Kong
Phone: 852-2341-3329
Fax: 852-2343-1830
E-mail: tx1607@netvigator.com

Indonesia

Tritex Equipment Pte. Ltd.
Location: , Singapore
Phone: (65) 6861 1188
Fax: (65) 6861 4263, (65) 6861 8797
E-mail: sales@tritex.com.sg
Web: www.tritex.com.sg

Israel

Yamit Mil Ltd.
Location: Ramat-Gan, Israel
Phone: 972 3 6123192
Fax: 972 3 6123197
E-mail: mil@yamitysb.co.il

Italy

Cummins Diesel Italia S.P.A
Location: Milan, Italy
Territory: Central & Southern Italy
Phone: 39 02 51 655 856
Fax: 39 02 51 65 58 55
E-mail: luigi.casaburi@cummins.com

Dometic Marine – Italy, Sales Company
Location: Milano, Italy
Phone: 39 0362 44182
Fax: 39 0362 452226
E-mail: marine.info@dometic.it

Nautica Centis di Nespolo Cinzia & C. Sne
Location: Bevazzana de Latisana (UD), Italy
Territory: Northeast Italy, Austria, Croatia, Slovenia
Phone: 390-431-53-644
Fax: 390-431-53-460
E-mail: nautica.centis@nauticacentis.it
Web: www.nauticacentis.it

Japan

Gunji Corporation
Location: Osaka, Japan
Phone: 81-6-6451-5615
Fax: 81-6-6454-0056
E-mail: gunji@gunji.com
Web: www.gunji.com

Kuwait

Mantech
Location: Dubai, United Arab Emirates
Phone: 971 4 333 25 42
Fax: 971 4 333 06 49
E-mail: mge@emirates.net.ae

Luxembourg

Eberca
Location: , Netherlands
Phone: 31 186621955
Fax: 31 186621818
E-mail: info@eberca.nl

Malaysia

Tritex Equipment Pte. Ltd.
Location: , Singapore
Phone: (65) 6861 1188
Fax: (65) 6861 4263, (65) 6861 8797
E-mail: sales@tritex.com.sg
Web: www.tritex.com.sg

Maldives

Tritex Equipment Pte. Ltd.
Location: , Singapore
Phone: (65) 6861 1188
Fax: (65) 6861 4263, (65) 6861 8797
E-mail: sales@tritex.com.sg
Web: www.tritex.com.sg

Wheel Engineering Services

Location: Malé, Maldives
Territory: Maldives
Phone: 960-327806
Fax: 960-324145
E-mail: wes@avasmail.com.mv

Malta

Dometic Marine - United Kingdom, Sales Company

Location: Poole, Dorset, United Kingdom
Phone: 44 (0) 870 3306101
Fax: 44 (0) 870 3306102
E-mail: sales@dometicmarine.com
Web: www.dometic.com

Inmartech Ltd

Location: Swieqi, STJ 04, Malta
Territory: Malta
Phone: 356 21376476
Fax: 356 21376476
E-mail: inmartech@waldonet.net.mt

Mexico

Southern California Marine Enterprises

Location: San Diego, CA, USA
Phone: 619-224-2869
Fax: 619-226-0496
E-mail: sales@southerncalmarine.com
Web: www.southerncalmarine.com

Monaco

Polymarine Distribution

Location: Cannet, Rocheville, France
Phone: 0033 493463634
Fax: 0033 493463634
E-mail: polymarine.bayle@free.fr

Mozambique

Southern Power Products

Location: Cape Town, South Africa
Phone: 27-21-511-0653
Fax: 27-21-510-3049
E-mail: sales@southernpower.co.za

Myanmar

Tritex Equipment Pte. Ltd.

Location: , Singapore
Phone: (65) 6861 1188
Fax: (65) 6861 4263, (65) 6861 8797
E-mail: sales@tritex.com.sg
Web: www.tritex.com.sg

Namibia

Southern Power Products

Location: Cape Town, South Africa
Phone: 27-21-511-0653
Fax: 27-21-510-3049
E-mail: sales@southernpower.co.za

Netherlands

Eberca

Location: , Netherlands
Phone: 31 186621955
Fax: 31 186621818
E-mail: info@eberca.nl

Netherlands Antilles

Enertech N.V.

Location: Simpson Bay, St. Maarten/St. Martin, Netherland Antilles
Phone: 599-551-2145
Fax: 305-675-5857 (USA)
E-mail: service@enertechnv.com
Web: www.enertechnv.com

First Needs Co.

Location: Curacao, Netherlands Antilles
Phone: 599 966 69139
Fax: 599 976 79003
E-mail: hcraft@attglobal.net
Web: www.firstneedscuracao.com

New Caledonia

Altomarine

Location: Noumea, New Caledonia
Phone: 687 25 96 12
Fax: 687 25 43 30
E-mail: altomar@altomarine.com

New Zealand

Whiting Power Systems

Location: Auckland, New Zealand
Phone: 64-9-358-2050
Fax: 64-9-358-0285
E-mail: sales@whiting.co.nz
Web: www.whitingpower.com

Norway

Refnor A.S.

Location: Østerås, Norway
Phone: 47-67 14 07 50
Fax: 47-67 14 70 88
E-mail: refnor.as@c2i.net

Oman

Hi-Tech Projects LLC

Location: Muscat, Oman
Phone: 968-595056/57/58
Fax: 968-595054
E-mail: hitech1@omantel.net.om

Mantech

Location: Dubai, United Arab Emirates
Phone: 971 4 333 25 42
Fax: 971 4 333 06 49
E-mail: mge@emirates.net.ae

Pakistan

Communications & Machinery Corp.

Location: Karachi, Pakistan
Phone: 92-21-5678252
Fax: 92-21-5683283
E-mail: cmcorp@cyber.net.pk

Panama

Compañìa Evans Masters

Location: La Chorrea, Panama
Territory: Panama
Phone: 507-232-5406
Fax: 507-232-7648
E-mail: info@evanmasters.com
Web: www.evansmasters.com

Gato Frío

Location: Playa Jaco, Costa Rica
Territory: Costa Rica, Panama
Phone: 506-637-7181
Fax: 506-637-7180
E-mail: eric@yachtshare.net

Papua New Guinea

Lohberger Engineering Pty

Location: Pors Moresby, Papau New Guinea
Phone: 675-321-2122
Fax: 675-321-2704
E-mail: loheng@online.net.pg

Philippines

Tritex Equipment Pte. Ltd.

Location: , Singapore
Phone: (65) 6861 1188
Fax: (65) 6861 4263, (65) 6861 8797
E-mail: sales@tritex.com.sg
Web: www.tritex.com.sg

Portugal

Powercool Lda

Location: Portimao, Portugal
Phone: 351 91 786 63 73
Fax: 351 282 461 818
E-mail: info@powercool.org
Web: www.powercool.org

Puerto Rico

Centro Cruisair de Puerto Rico

Location: Santurce, Puerto Rico
Phone: 787-727-3637
Fax: 787-727-3637

Cool-Tech Air Conditioning

Location: Fajardo, Puerto Rico
Phone: (787) 860-2615
Fax: (787) 801-2050
E-mail: cooltech@isppr.net

May Day Marine

Location: San Juan, Puerto Rico
Territory: Puerto Rico, Dominican Republic
Phone: 787-720-9628
Fax: 787-790-2551

Sun Cool Air Conditioning Copr

Location: Carolina, Puerto Rico
Phone: 787-791-6971
Fax: 787-791-3885
E-mail: suncool1@coqui.net

Technical House (E.T.S. Inc.)

Location: San Juan, Puerto Rico
Territory: Sentry Battery Chargers Only
Phone: 787-781-1313
Fax: 787-781-2020
E-mail: jdonato@technicalhouse.com
Web: www.technicalhouse.com

Qatar

Mantech

Location: Dubai, United Arab Emirates
Phone: 971 4 333 25 42
Fax: 971 4 333 06 49
E-mail: mge@emirates.net.ae

Russia

Standarte

Location: Starbeevo, Moscow region, Russia
Phone: 7 095 575 67 23
Fax: 7 095 575 39 77
E-mail: info@standarte.ru
Web: www.standarte.ru

Saudi Arabia

Mantech

Location: Dubai, United Arab Emirates
Phone: 971 4 333 25 42
Fax: 971 4 333 06 49
E-mail: mge@emirates.net.ae

Samaco Marine

Location: Jeddah, Saudi Arabia
Phone: 966-2-6990064
Fax: 966-2-6991024

Scandinavia

Dometic Marine – Nordic Sales, Sales Company

Location: Halmstad, Sweden
Phone: +46 35 16 57 00
Fax: +46 35 16 57 10
E-mail: marine.info@dometic.se
Web: www.dometic.com

Refnor A.S.

Location: Østerås, Norway
Phone: 47-67 14 07 50
Fax: 47-67 14 70 88
E-mail: refnor.as@c2i.net

Singapore

Tritex Equipment Pte. Ltd.

Location: , Singapore
Phone: (65) 6861 1188
Fax: (65) 6861 4263, (65) 6861 8797
E-mail: sales@tritex.com.sg
Web: www.tritex.com.sg

Slovenia

Dometic Marine – Italy, Sales Company

Location: Milano, Italy
Phone: 39 0362 44182
Fax: 39 0362 452226
E-mail: marine.info@dometic.it

Nautica Centis di Nespolo Cinzia & C. Sne

Location: Bevazzana de Latisana (UD), Italy
Territory: Northeast Italy, Austria, Croatia, Slovenia
Phone: 390-431-53-644
Fax: 390-431-53-460
E-mail: nautica.centis@nauticacentis.it
Web: www.nauticacentis.it

South Africa

Southern Power Products

Location: Cape Town, South Africa
Phone: 27-21-511-0653
Fax: 27-21-510-3049
E-mail: sales@southernpower.co.za

Spain

Acastimar

Location: Tarragona, Spain
Phone: 349-77-362118
Fax: 349-77-362687
E-mail: acastimar@acastimar.com

Sri Lanka

G&M Enterprises

Location: Borella-Colombo 8, Sri Lanka
Phone: 94-11-2691966
Fax: 94-11-2691751
E-mail: gandm@sltnet.lk

Sweden

Dometic Marine – Nordic Sales, Sales Company

Location: Halmstad, Sweden
Phone: +46 35 16 57 00
Fax: +46 35 16 57 10
E-mail: marine.info@dometic.se
Web: www.dometic.com

Switzerland

Marine Parts Heimgartner

Location: Volketswil, Switzerland
Phone: 41-1-997 40 90
Fax: 41-1-997 40 94
E-mail: info@marineparts.ch
Web: www.marineparts.ch

Taiwan

Ing Hai Company, Ltd.

Location: Kaohsiung, Taiwan
Phone: 886-7-802-1809
Fax: 886-7-802-1809

Ing Hai Company, Ltd.

Location: Taipei, Taiwan
Phone: 886-2-2531-2088
Fax: 886-2-2523-6531
E-mail: inghai@tpts6.seed.net.tw

Thailand

Thai Kolon Co. Ltd.

Location: Bangkok, Thailand
Phone: 66-2-745-6468-77 (10 lines)
Fax: 66-2-745-6152
E-mail: thkolon@ji-net.com

Trinidad & Tobago

Nau-T-Kol Marine Refrigeration

Location: Chaguaramas, Trinidad
Phone: 868-634-2174
Fax: 868-634-2174
E-mail: nautkol@cablenett.net
Web: www.nautkol.com

Turkey

Dometic Marine - United Kingdom, Sales Company

Location: Poole, Dorset, United Kingdom
Phone: 44 (0) 870 3306101
Fax: 44 (0) 870 3306102
E-mail: sales@dometicmarine.com
Web: www.dometic.com

Egemar Mühendislik Ltd

Location: Istanbul, Turkey
Phone: 90 216 494 2168
Fax: 90 216 494 22 18
E-mail: sales@egemar.com.tr
Web: www.egemar.com.tr

U.S. Virgin Islands

Coral Bay Marine Service

Location: St. John, U.S. Virgin Islands
Phone: 340-776-6859
Fax: 340-776-6859

Dr. Ice

Location: St. Thomas, US Virgin Islands
Territory: St. Thomas
Phone: 340-775-4540
Fax: 340-775-6575
E-mail: lastlaugh44@pennswoods.net

Reefco

Location: St. Thomas, U.S. Virgin Islands
Phone: 340-776-0038
Fax: 340-776-0038
E-mail: dennyedy@viaccess.net

St. Croix Marine Corp.

Location: St. Croix, U.S. Virgin Islands
Phone: 340-773-0289
Fax: 340-778-8974
E-mail: stcroixmarine@hotmail.com

Ukraine

Standarte

Location: Starbeevo, Moscow region, Russia
Phone: 7 095 575 67 23
Fax: 7 095 575 39 77
E-mail: info@standarte.ru
Web: www.standarte.ru

United Arab Emirates

Mantech

Location: Dubai, United Arab Emirates
Phone: 971 4 333 25 42
Fax: 971 4 333 06 49
E-mail: mge@emirates.net.ae

United Kingdom

Dometic Marine - United Kingdom, Sales Company

Location: Poole, Dorset, United Kingdom
Phone: 44 (0) 870 3306101
Fax: 44 (0) 870 3306102
E-mail: sales@dometicmarine.com
Web: www.dometic.com

Uruguay

Trimer S.A.

Location: Buenos Aires, Argentina
Phone: 5411-4580-0444
Fax: 5411-4580-0440
E-mail: trimer@trimer.com.ar
Web: www.trimer.ar

Venezuela

Rich Marine Center, C.A.

Location: Puerto La Cruz,, Estado Anzoategui, Venezuela
Phone: 58 281 2181630
Fax: 58 281 2811630
E-mail: richmarine@telcel.net.ve
Web: www.tuyate.net

West Indies

Aboard Refrigeration

Location: English Harbour, Antigua
Phone: 268-460-1690
Fax: 419-858-0544
E-mail: aboardrf@candw.ag

Regis Electronics (St Lucia) LTD.

Location: St. Lucia, West Indies
Phone: 758-452-0205
Fax: 758-452-0206
E-mail: stlucia@regiselectronics.com

Zambia

Southern Power Products

Location: Cape Town, South Africa
Phone: 27-21-511-0653
Fax: 27-21-510-3049
E-mail: sales@southernpower.co.za

Zimbabwe

Southern Power Products

Location: Cape Town, South Africa
Phone: 27-21-511-0653
Fax: 27-21-510-3049
E-mail: sales@southernpower.co.za

Dometic Environmental Corporation

P.O. Box 15299 • Richmond, VA 23227-0699 USA Phone: 804-746-1313 • Facsimile: 804-746-7248
For Sales and Service Calls within Europe and the Middle East, please contact +44 (0) 870 330 6101

Email: sales@cruisair.com • Website: www.cruisair.com

The Sign of Comfort

L-0921