500 and 700 Series SeaLand® Toilets

Premium gravity-flush toilets for diverse boats

Model 510+PS
SeaLand Toilet

5oo Plus Series Gravity-Flush Toilets

Dometic foot-pedal toilets provide the ultimate water-conserving flush by using as little as 1 US pint/0.4 liter per flush. Designed to install directly above a holding tank, Dometic's patented flush mechanism creates an airtight seal between head compartment and holding tank. Elongated seat and deep bowl provide the most home-like comfort available in pedal-flush toilets. Anti-splash rim keeps water in the bowl while underway. Available in sparkling white and bone colors.

Key Benefits

- Elongated, solid seat for comfort and support
- Robust mechanisms withstand high frequency use
- Foot-pedal flush requires no electric power
- Integral vacuum breaker protects water supply
- 510+PS also available in low-profile model (511+PS) for raised platforms
- Proven in thousands of marine applications

711-M28 Gravity-Flush Toilet

Get a complete freshwater toilet system in one self-contained package. Using on-board water supply, this toilet system produces no foul odors associated with seawater systems. It's also a great replacement for recirculating toilets. Just connect water supply, discharge plumbing and vent line – it's ready to go.

Key Benefits

- 9-gal. (36 l) holding tank capacity
- As little as 1 pint (0.4 l) per flush
- Solid seat for home-like comfort
- Foot-pedal flush requires no electric power
- Integral vacuum breaker protects water supply
- Ceramic bowl and high-strength polyethylene holding tank provide many years of use

Model 711-M28
SeaLand Toilet

500 Plus Series SeaLand® Toilet Technical Specifications

Model	Description	Discharge	Weight*
510+PS	Standard-height, foot pedal flush, gravity-discharge toilet	through the floor	41 lbs./18.6 kg
511+PS	Low-profile, foot pedal flush, gravity-discharge toilet	through the floor	40 lbs./18.1 kg

All models are available in white or bone color.
Specifications subject to change without notice.

* Weight may vary ± 2-3 percent.

500 Plus Series System Requirements

Water Supply	ID	0.5 in. NPT fitting
	Flow rate	2.0 gpm/7.6 lpm at toilet, minimum
Discharge	ID	3 in./76 mm ID ABS or PVC flange connection directly over holding tank

Specifications subject to change without notice.

Dimensions

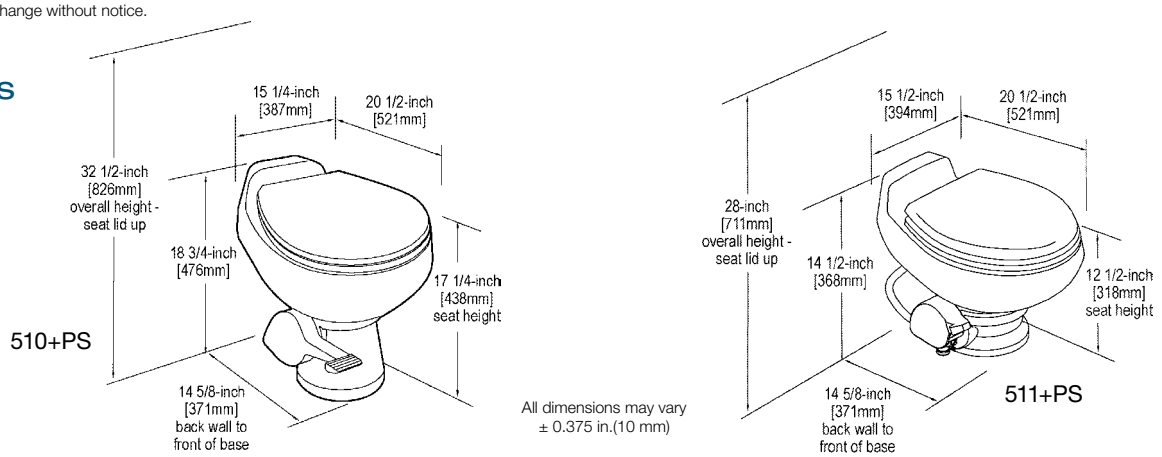

711-M28 SeaLand® Toilet Technical Specifications

Model	Description	Tank Discharge	Weight*
711-M28	Self-contained, standard-height toilet/holding tank combination, foot pedal flush	1.5 in./38 mm ID plumbing	45 lbs./20.4 kg

Available in white or bone color.
Specifications subject to change without notice.

* Weight may vary ± 2-3 percent.

711-M28 System Requirements

Water Supply	ID	0.5 in. NPT fitting
	Flow rate	2.0 gpm/7.6 lpm at toilet, minimum
Discharge	Tank	1.5 in./38 mm ID sanitation hose or pipe
	Vent	5/8 in./16 mm ID hose

Specifications subject to change without notice.

Dimensions

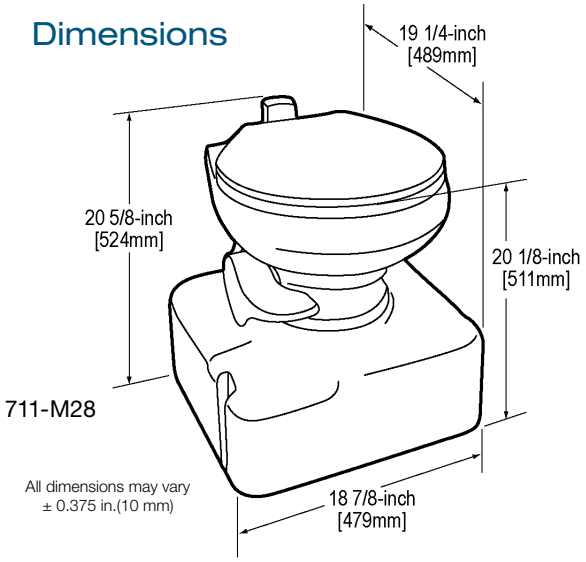

DOMETIC CORPORATION, SANITATION DIVISION
13128 SR 226, PO Box 38 I Big Prairie, OH 44611 USA I 330-496-3211 I Fax 330-496-3097
www.Dometic.com I SeaLand@DometicUSA.com

L-2917 REV 9/10

Environmentally Responsible

SeaLand® by Dometic GROUP