Now Available With R-410A

Stay Cool With Dash Air

For Flybridge, Cockpit & On-Deck Installations

VLD16K self-contained model

Dash Air delivers high-velocity cold air (or HOT!) onto the bridge, cockpit, or deck using an innovative horizontal compressor. The 16,000 BTU/hr. self-contained package stands just eight inches (203 mm) high and is easily ducted to confined spaces like flybridge dashboards and consoles.

Dash Air air conditioning systems use R-410A, an environmentally safe refrigerant with exceptional thermodynamic properties that maximize system efficiency.

Also available is a 16,000 BTU/hr. evaporator connected to a remote condensing unit below decks.

All Dash Air systems are reverse-cycle, blowing warm air on chilly days, thereby extending your cruising season. All units are designed for easy, professional installation on new boats and older vessels.

Dash Air features an oversized four-row evaporator coil for excellent heat removal under low fan-speed conditions. A highly efficient blower reduces power consumption, and the blower flows to two outlets.

Key Benefits

- Innovative horizontal compressor requires only 8 in. (203 mm) of height for installation.
- 16,000 BTU/hr. in a high-velocity unit.
- Highly-efficient dual blowers.
- Flybridge, cockpit and on-deck installations.
- Environmentally safe R-410A refrigerant.
- 304-grade stainless-steel drain pan for long service life.
- Stainless-steel condensate drains for excellent water removal.
- Condensate under evaporator to minimize sloshing and remove water rapidly.
- Remote electrical box with 5 ft. (1.52 m) harness.
- Special corrosion-resistant coating on blower and housing.
- Oversized four-row evaporator coil for excellent heat removal under low fan-speed conditions.

ISO 9001:2008

L–2620 Rev. 20110107

MARINE AIR SYSTEMS®
AIR
by Dometic GROUP

Technical Specifications for R-410A Dash Air Systems

Unit Type	Self-Contained Units			Split Evaporator	
Capacity (BTU/hr.)[1]	16,000			16,000	
Model Number	VLD16K	VLD16KZ	VLD16KZ50	EDLE16-115V	EDLE16-230V
Voltage (VAC)	115	230	240	115	230
Cycle (Hz)/Phase (Ph)[2]	60/1	60/1	50/1	60/1	60/1 & 50/1
Blower Amps	2.00	0.86	0.62	2.00	0.86 @ 230V/60Hz 0.62 @ 230V/50Hz
Full Load Amps (FLA) cool	11.0	4.7	4.5	N/A	
Full Load Amps (FLA) heat	14.2	6.2	5.8	N/A	
Locked Rotor Amps (Comp)	61	29	26	N/A	
K.V.A. (Kilo-Volt-Amps)	1.63	1.42	1.40	0.23	0.20
Max. Circuit Ampacity (Amps)	35	20	20	5	4
Min. Circuit Ampacity (Amps)	23	14	13	3	2
Refrigerant R-410A (oz/g)	16.0/454	15.0/425	15.5/439	N/A	N/A
Dimensions (in/mm)					
Height	8.00/203			7.40/188	
Width	30.25/768			22.25/566	
Depth	14.00/356			11.00/280	
Min. Duct Size Ø	7.0/178			7.0/178	
Min. SA Grille (sq. in./cm.)	80/516			80/516	
Min. RA Grille (sq. in./cm.)	160/1032			160/1032	
Net Weight (lbs/kg)	70/154			19/9	
Gross Weight (lbs/kg)	80/176			29/13	

[1] BTU and electrical data are based on a 45°F (7.2°C) evaporator and 100°F (37.8°C) condenser in cool mode, and a 45°F (7.2°C) evaporator and 130°F (54.4°C) condenser in heat mode.
[2] Note: 60Hz units must not operate at 50Hz and 50Hz units must not operate at 60Hz unless data plate says otherwise.

Available Custom Air Flow Accessories:

#229000005 PLNM AMN RA VLD16/2@5" Side Discharge Plenum
#229000006 PLNM AMN RA VLD16/2@5" Upward Discharge Plenum
#229000007 PLNM AMN RA VLD16/2@5" Downward Discharge Plenum
#228700089 Ring ABS trans 5"-OB Short Flange

Dimensions for Self-Contained Dash Air

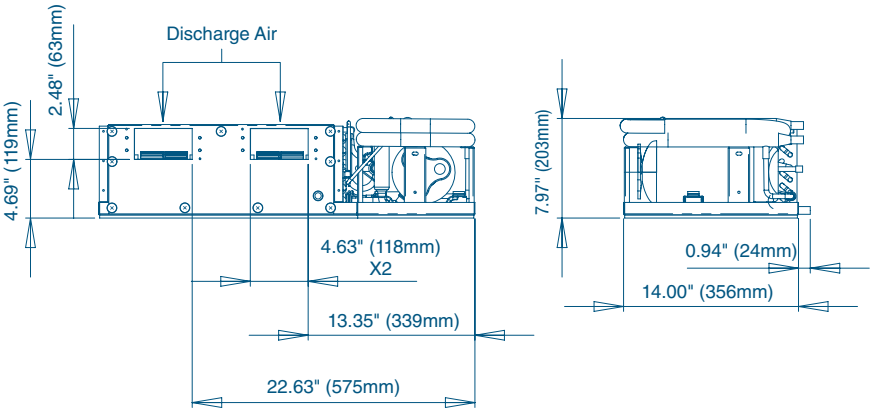

DOMETIC MARINE DIVISION
2000 N. Andrews Ave. Ext. I Pompano Beach, FL 33069 USA I 954-973-2477 I Fax 954-979-4414
www.DometicUSA.com I MarineSales@DometicUSA.com

24/7 Tech Support for United States & Canada:
8:00 AM to 5:00 PM Eastern Time: 800-542-2477
After hours and weekends: 888-440-4494

International Sales & Service:
Europe & the Middle East: Call +44(0)870-330-6101
For all other areas visit our website to find your nearest distributor.

Environmentally Responsible

Dealer:

Specifications and availability subject to change without notice.