DOMETIC

GUIDE WIRE HOLD DOWN
FITTING INSTRUCTIONS

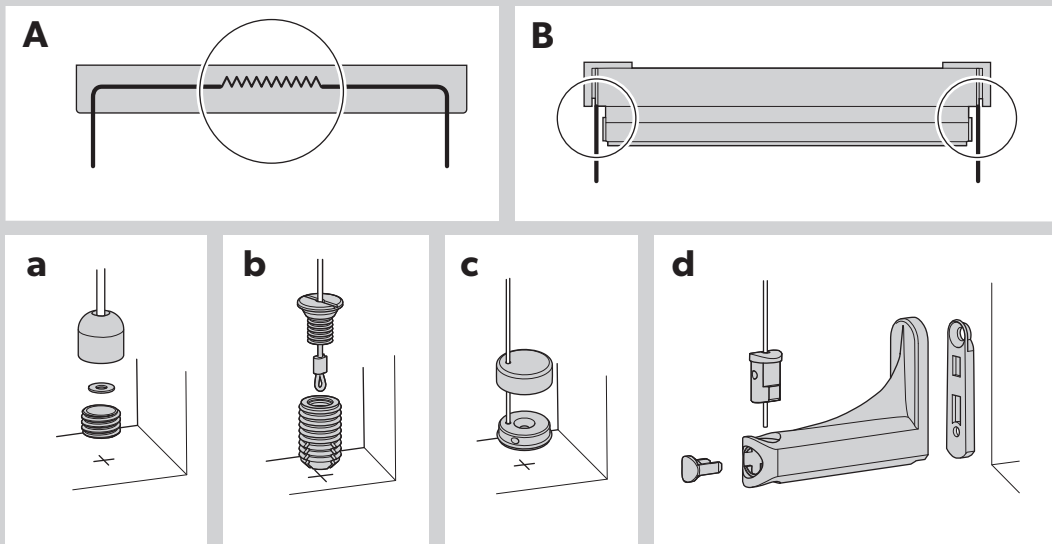

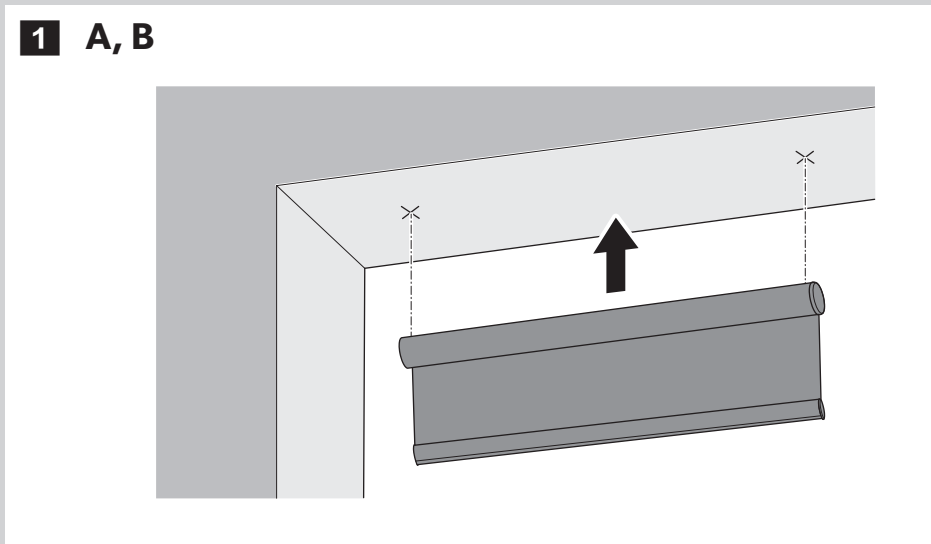

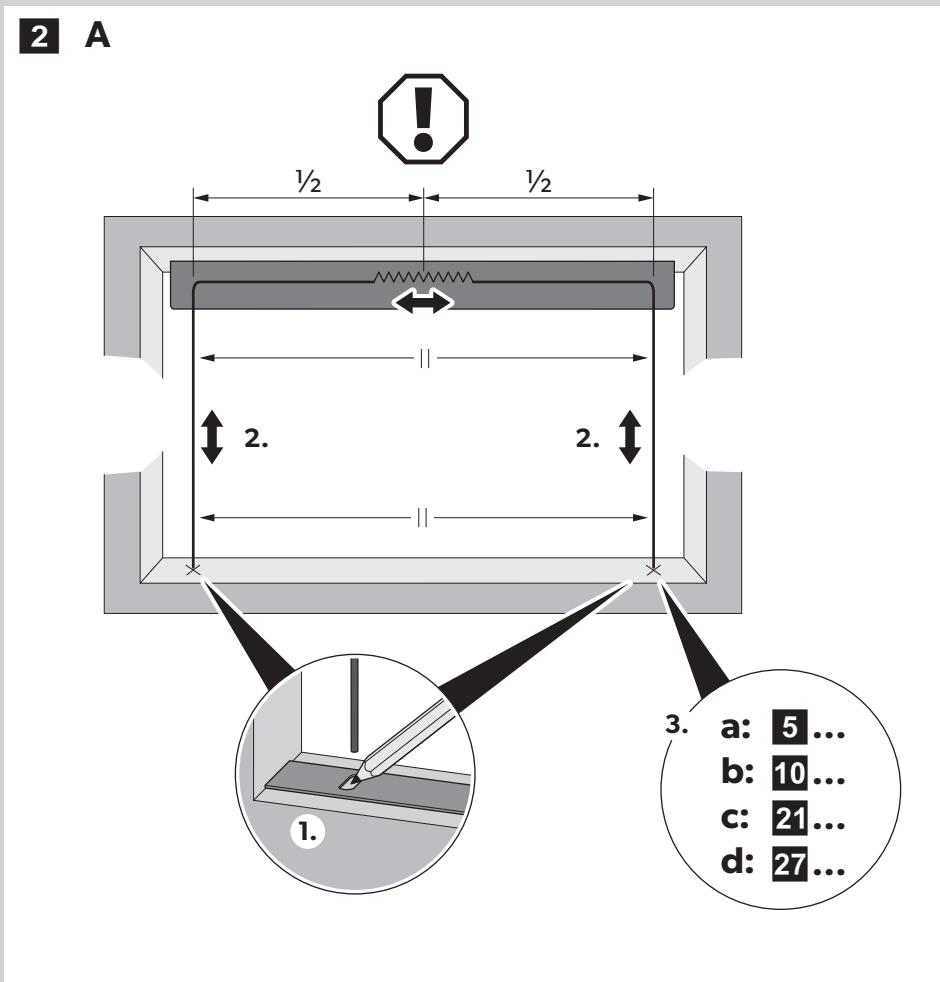

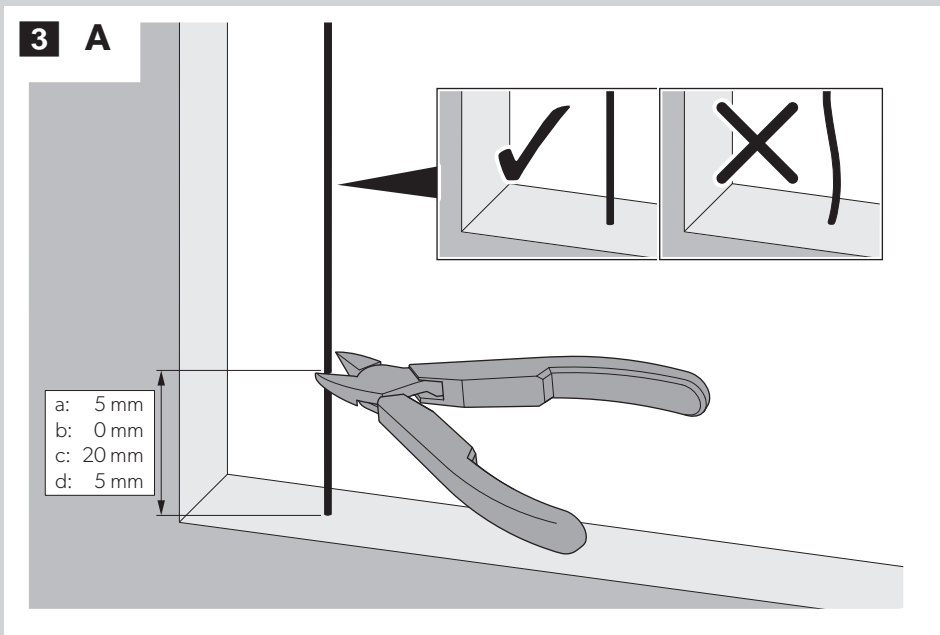

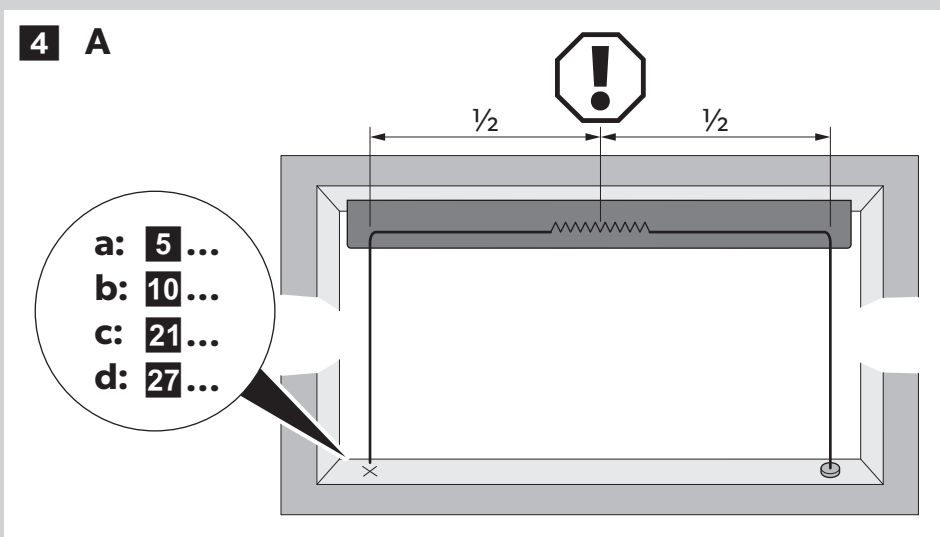

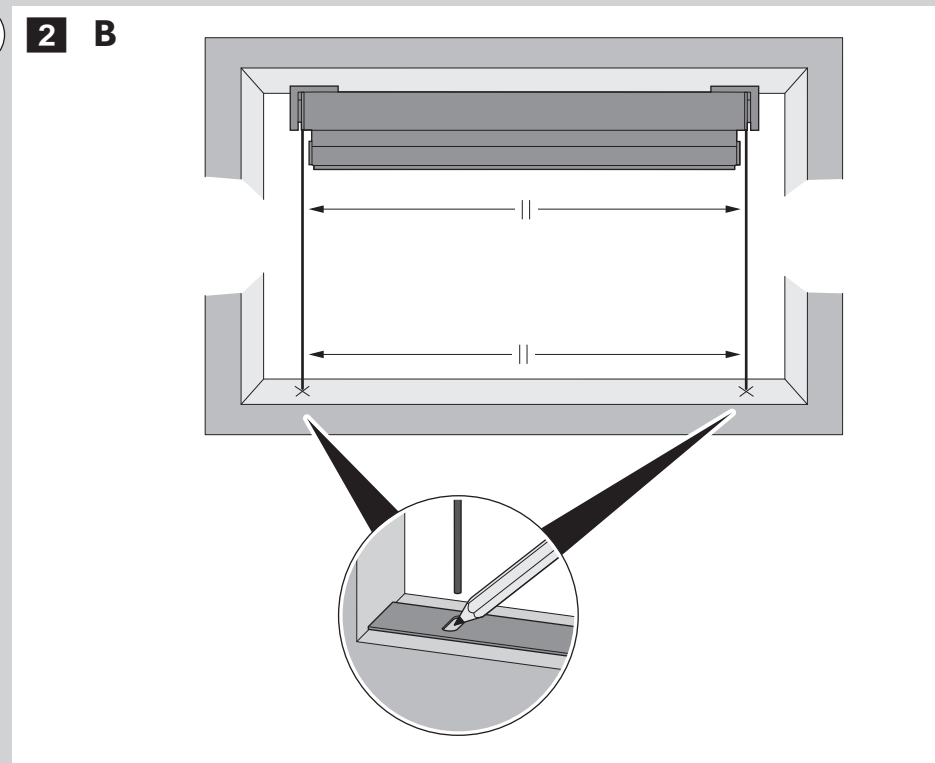

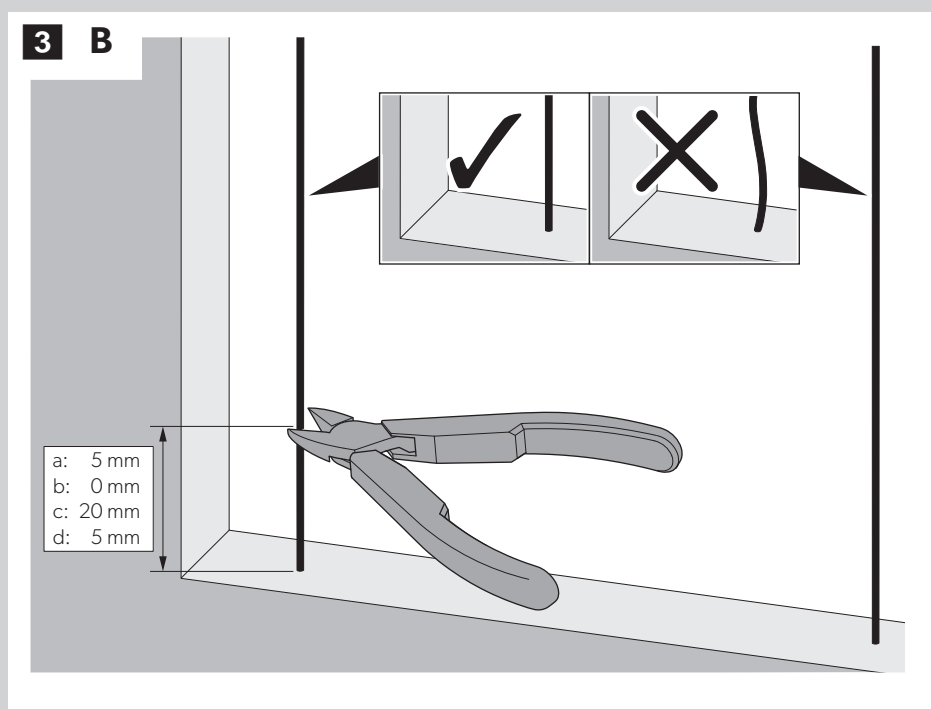

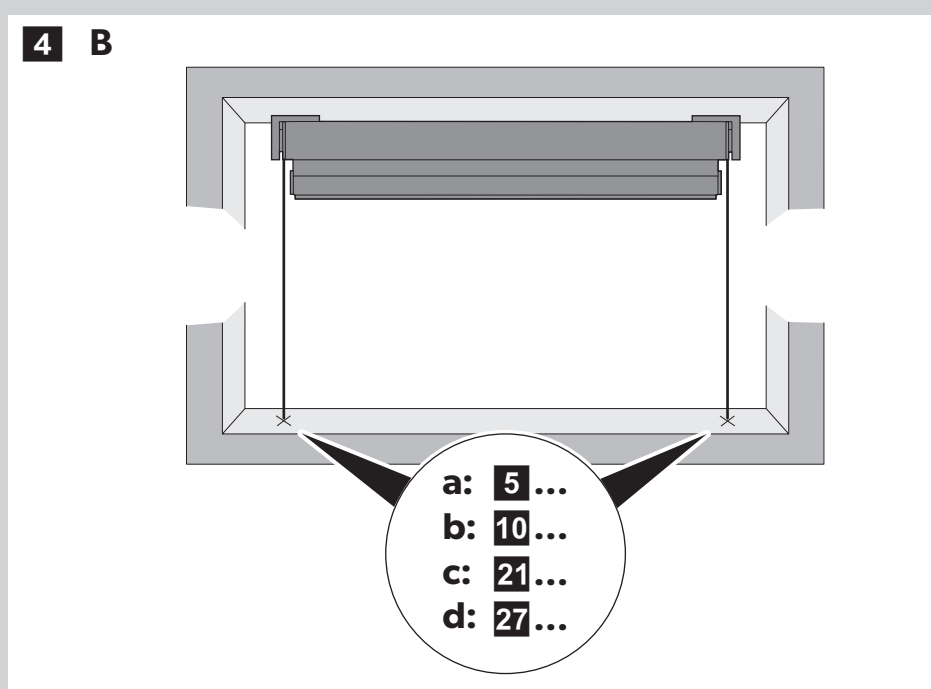

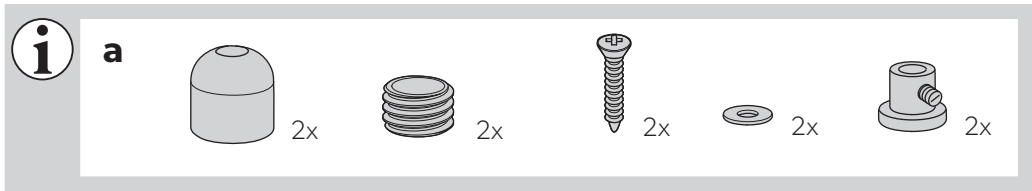

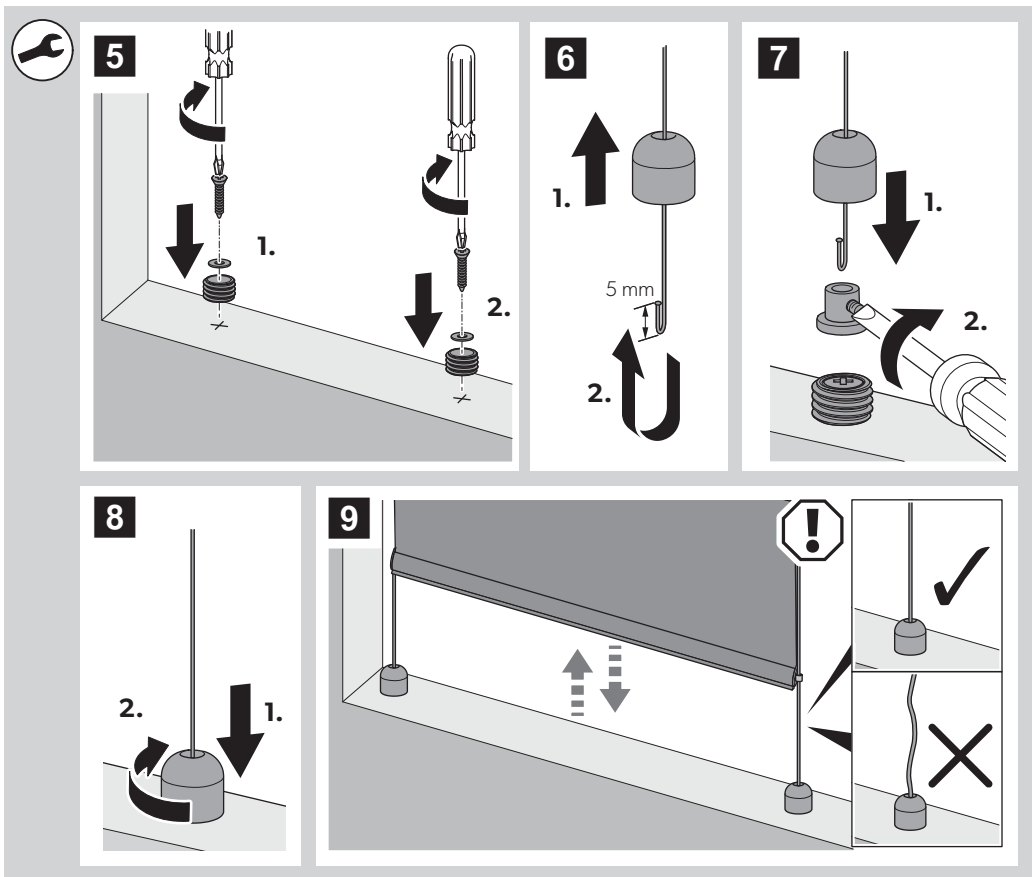

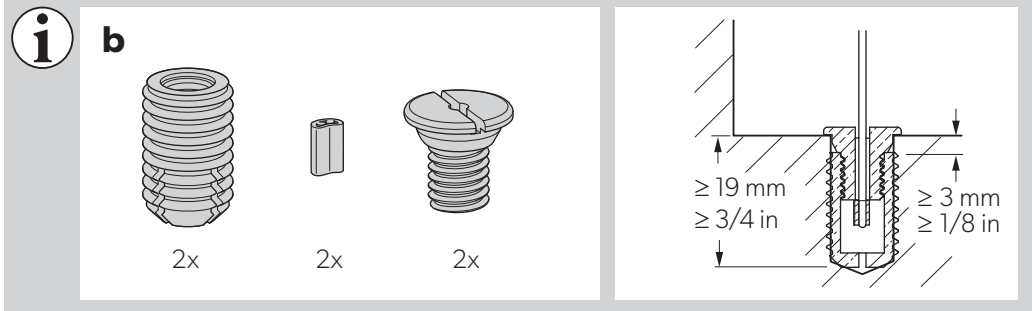

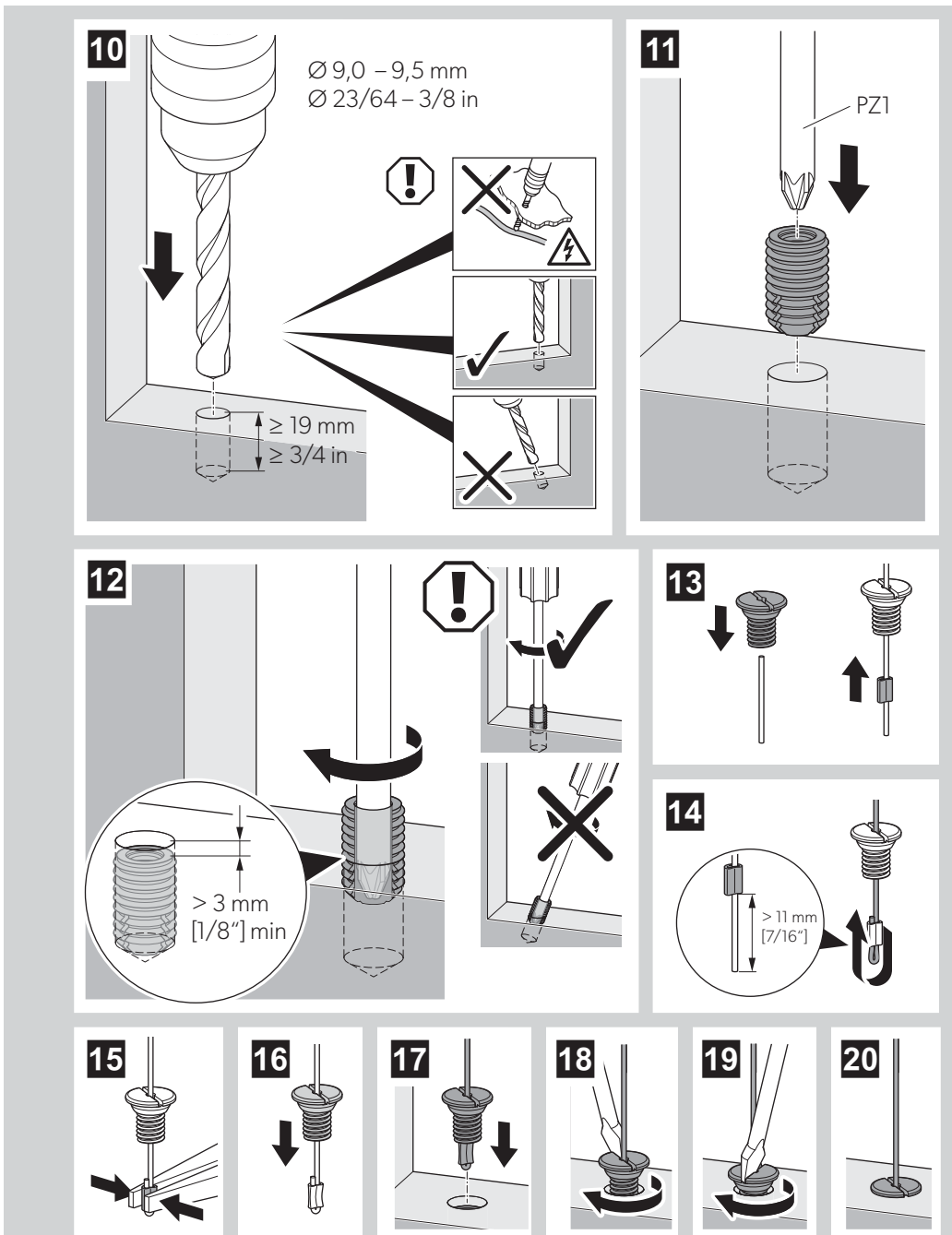

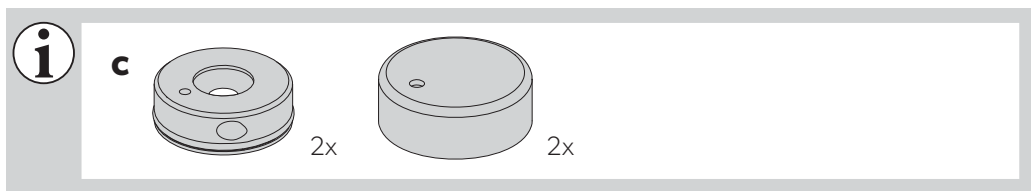

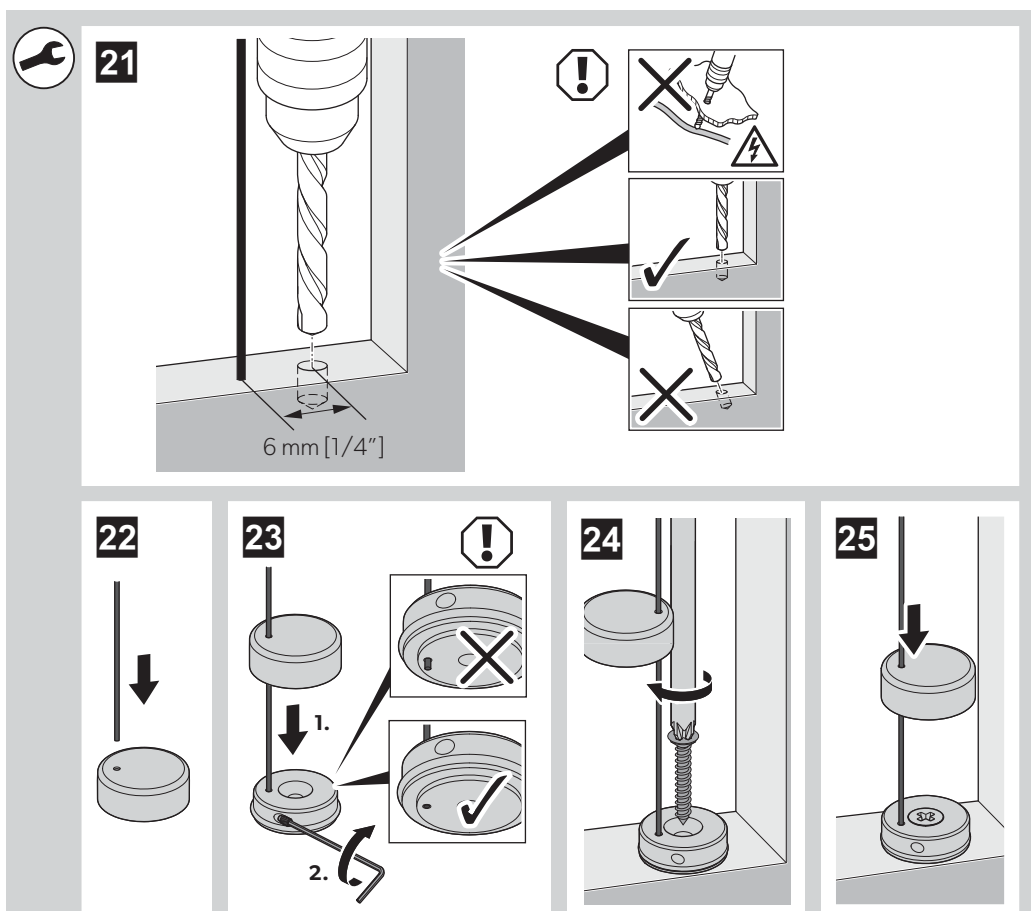

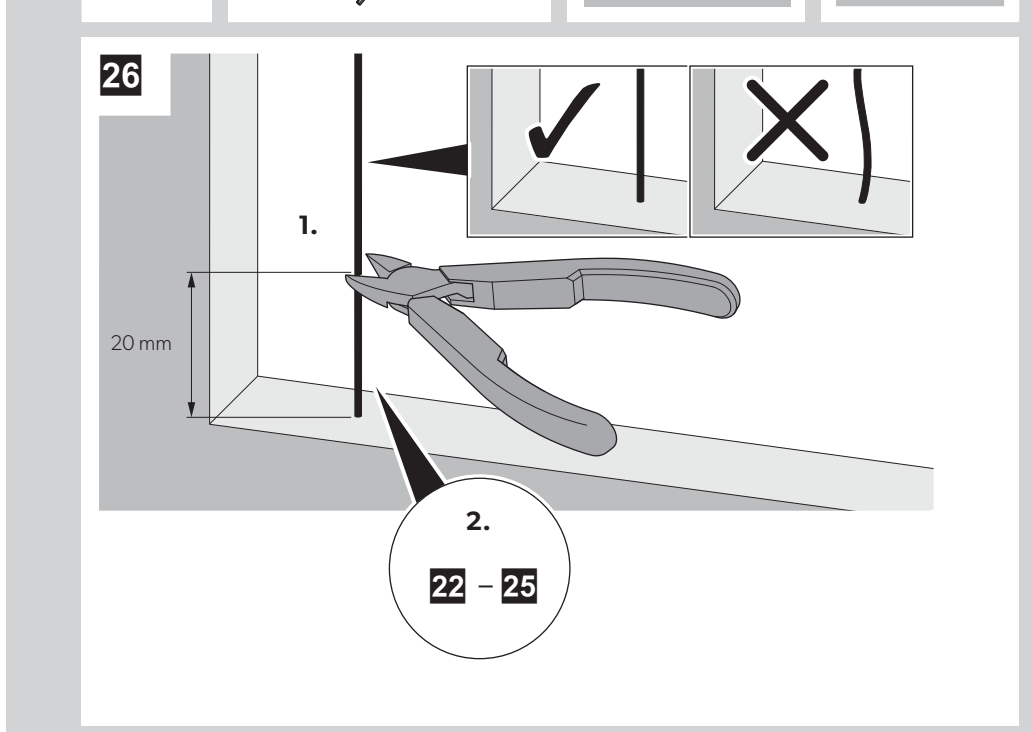

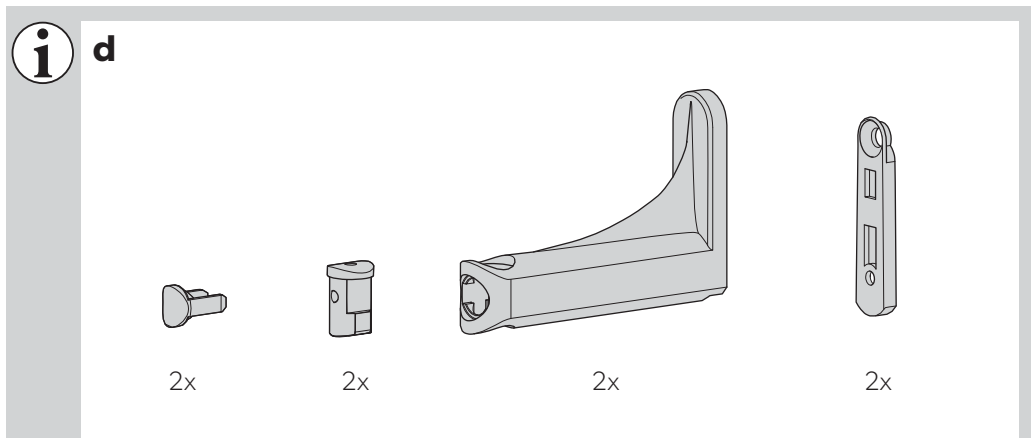

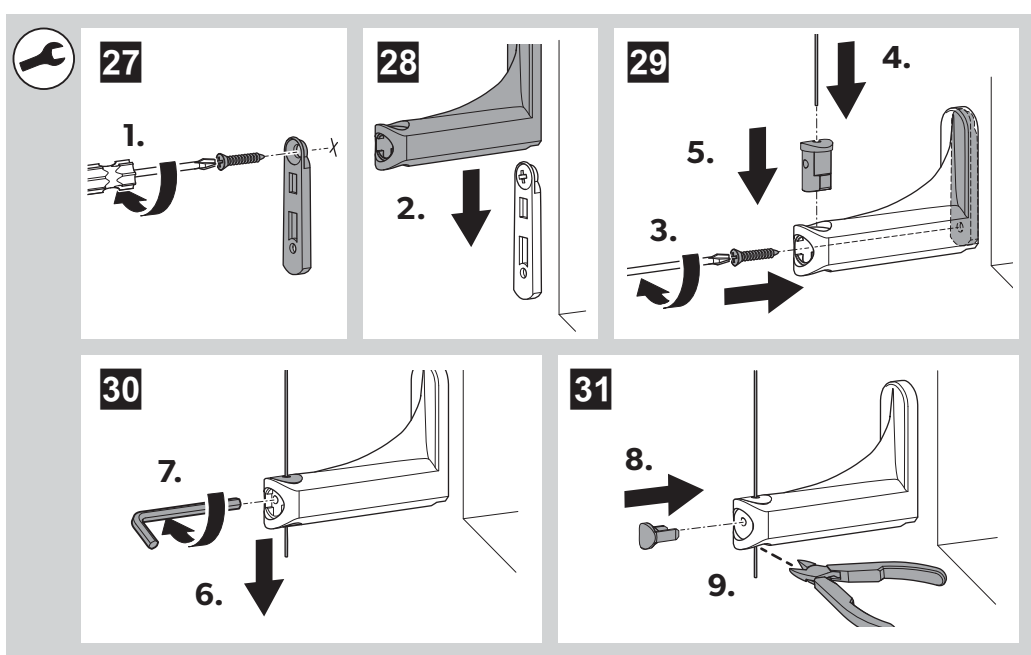

DOMETIC

YOUR LOCAL DEALER
dometic.com/dealer

YOUR LOCAL SUPPORT
dometic.com/contact

YOUR LOCAL SALES OFFICE
dometic.com/sales-offices

A complete list of Dometic companies, which comprise the Dometic Group, can be found in the public filings of:
DOMETIC GROUP AB Hemvärnsgatan 15 SE-17154 Solna Sweden

4445103376 2021-05-03