DOMETIC

# Heki 3 Plus

1

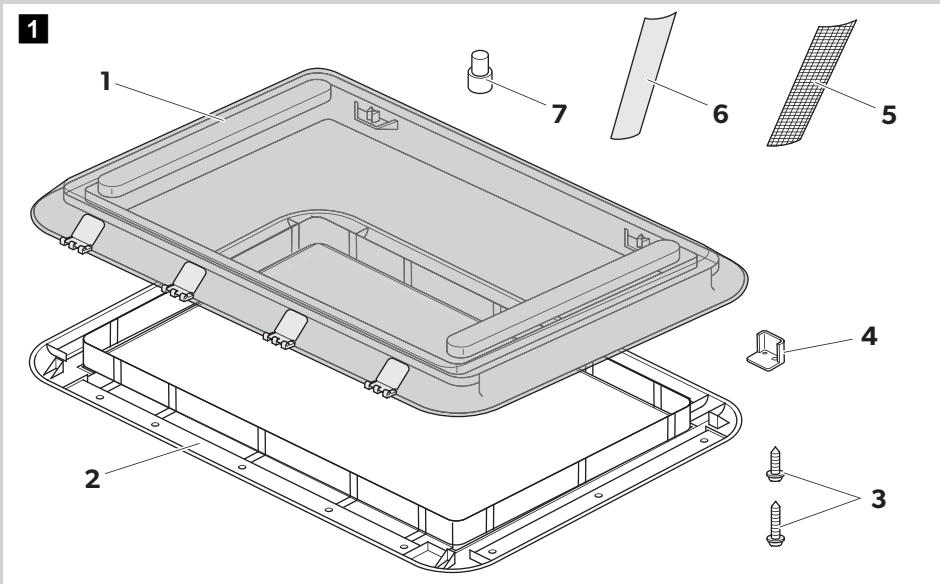


2

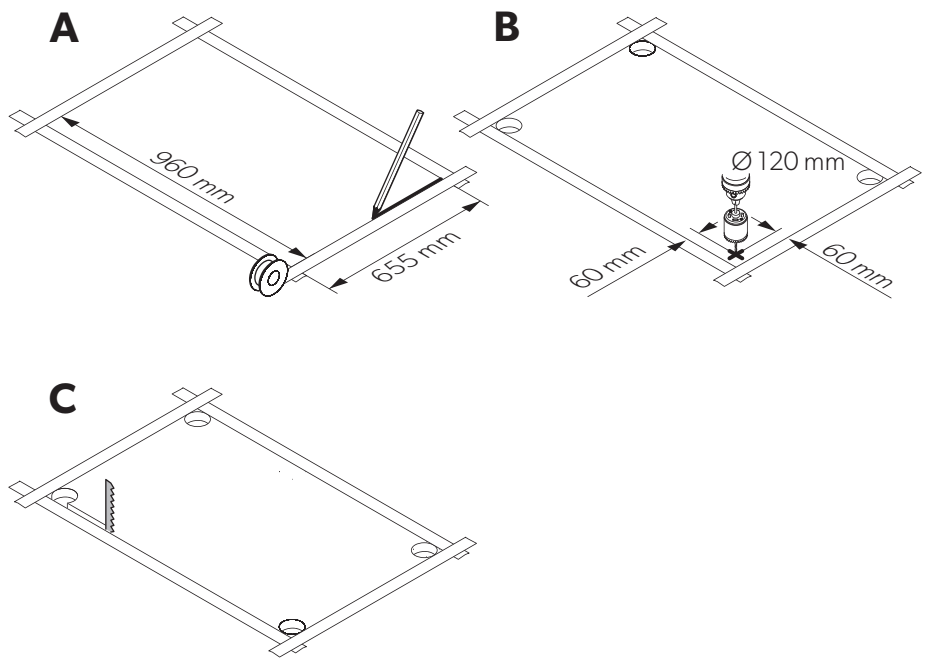


3

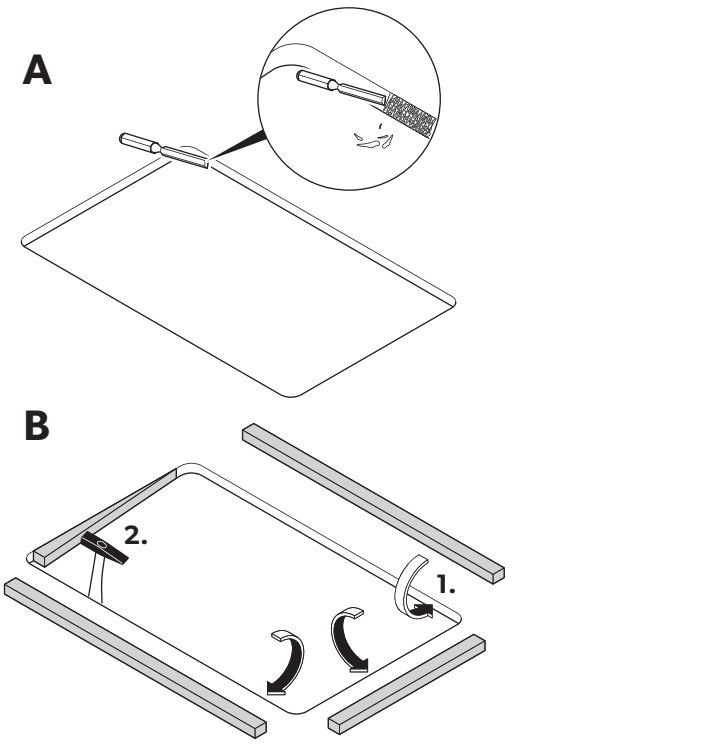


4

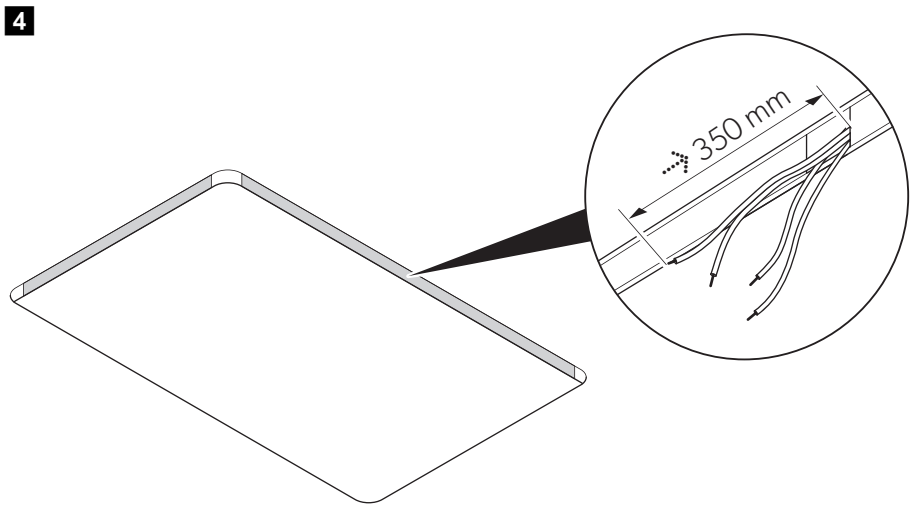


5

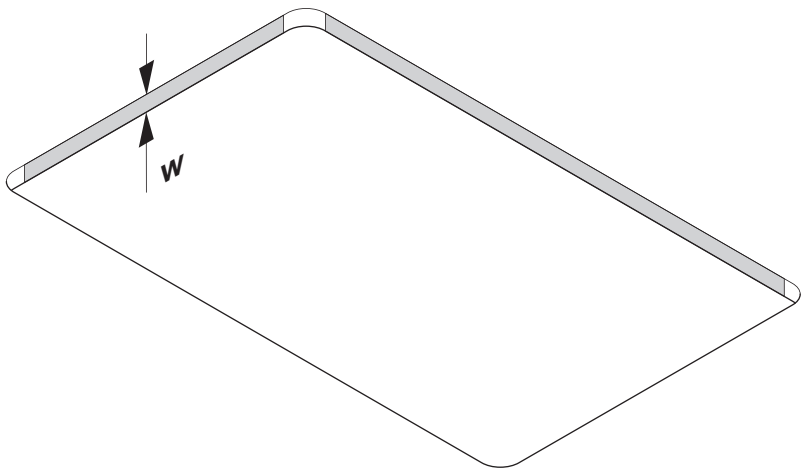


6

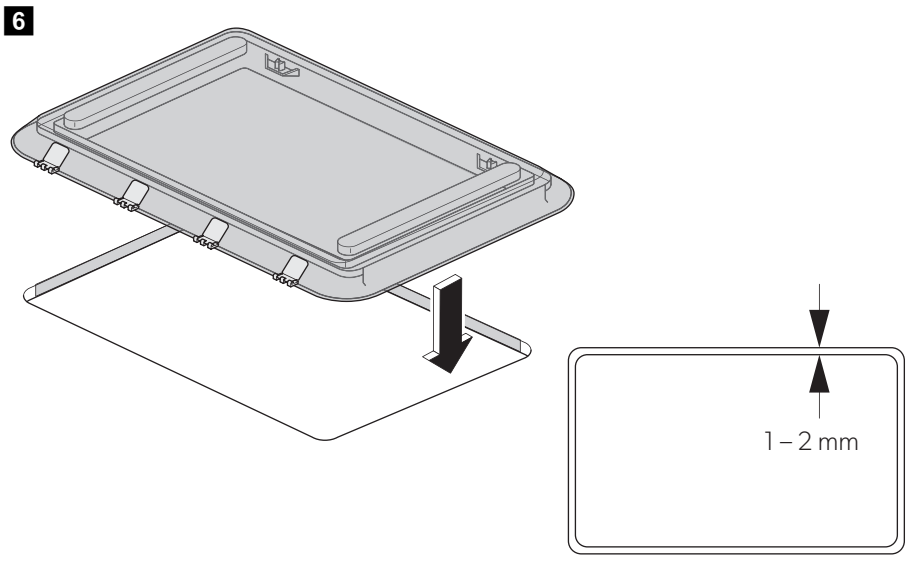


7

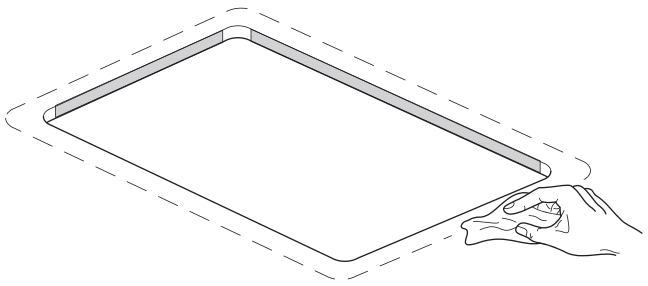

8

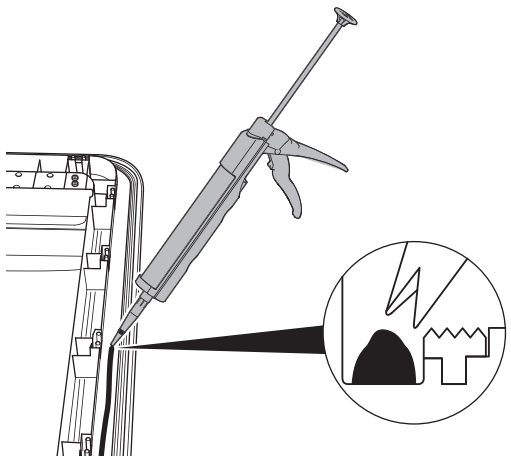

9

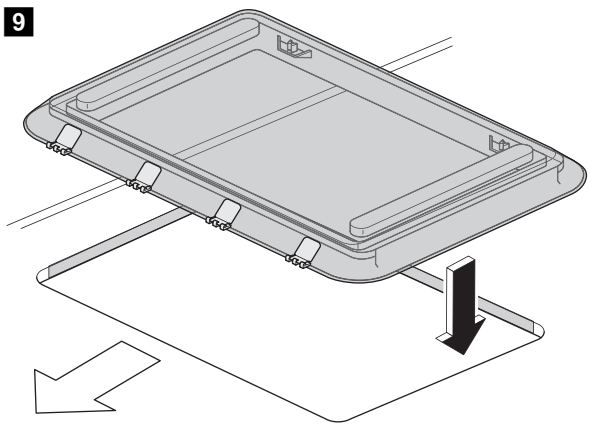

10

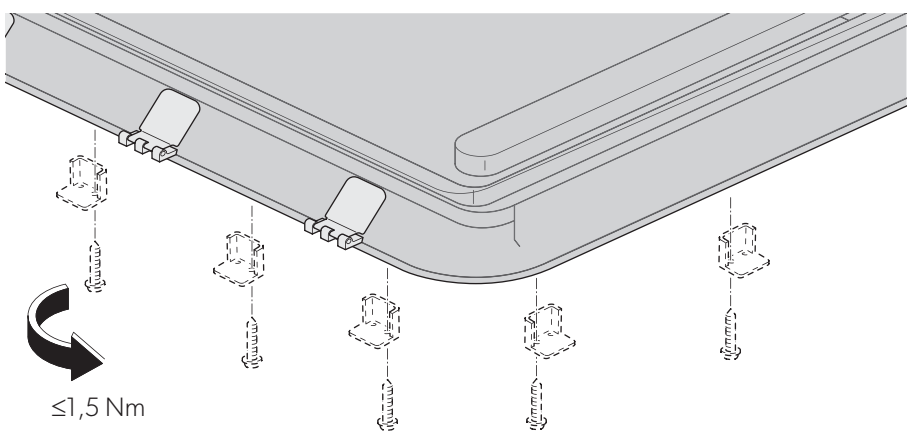

11

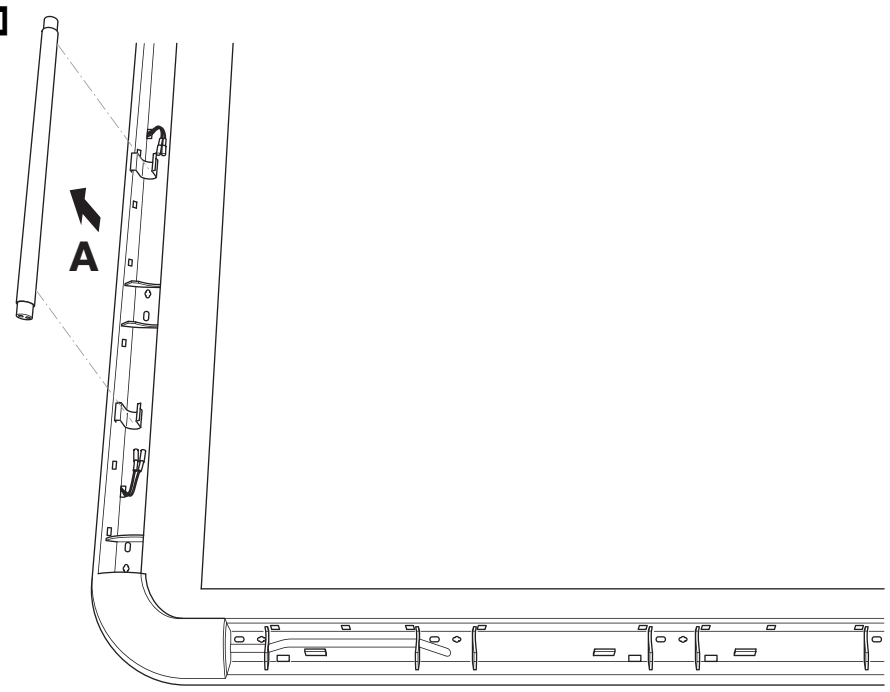


12

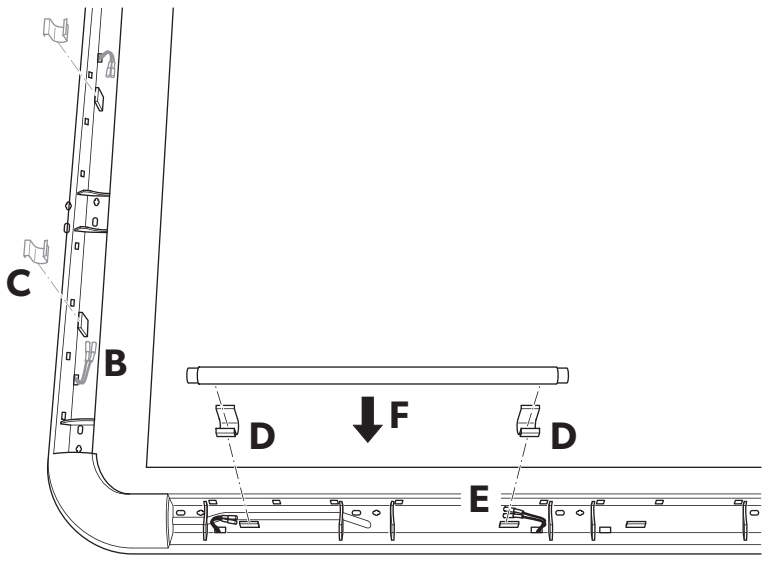


13

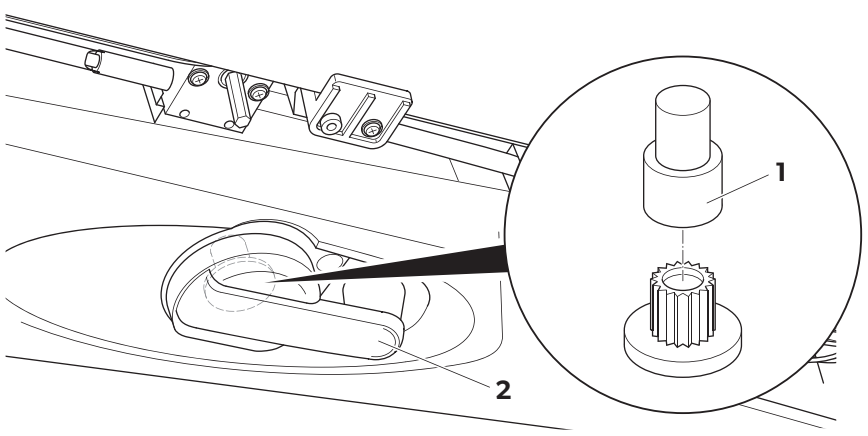


14

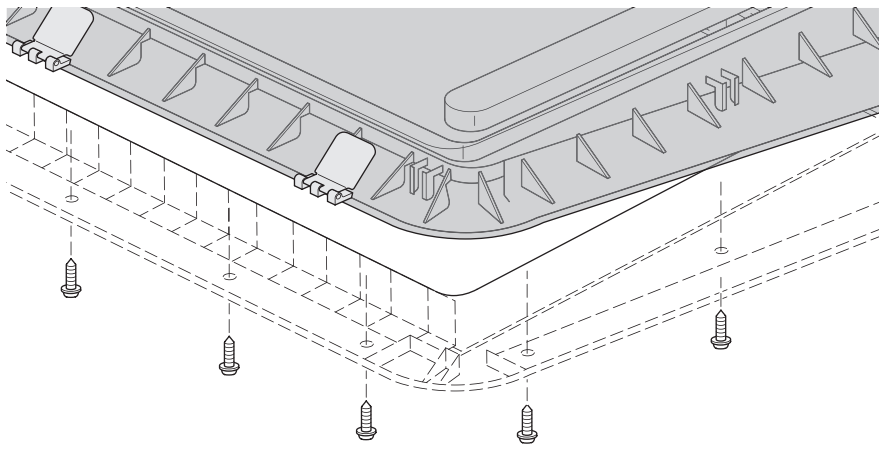

15

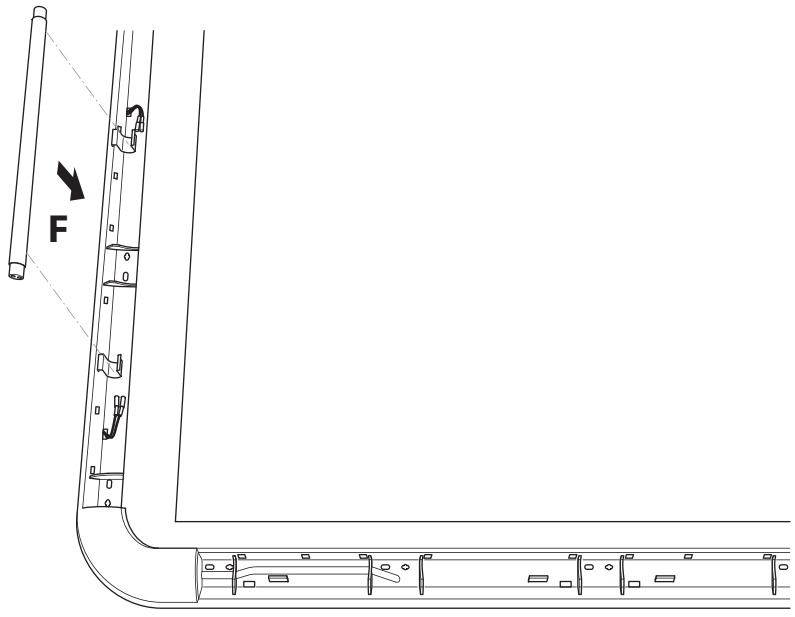


16

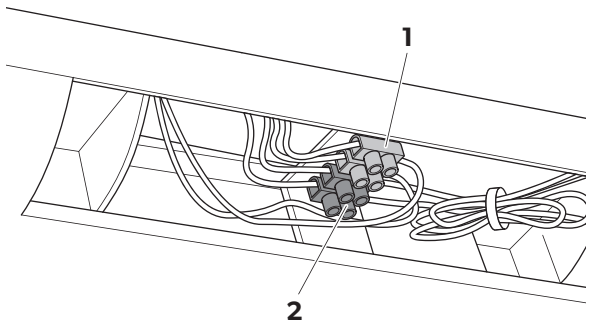


17

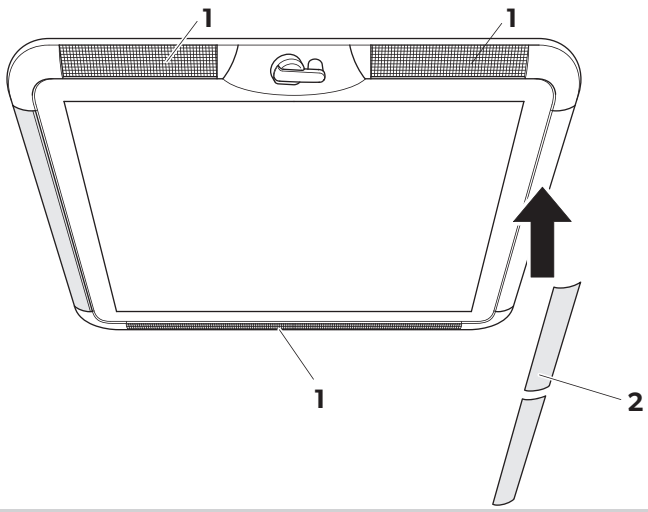


18

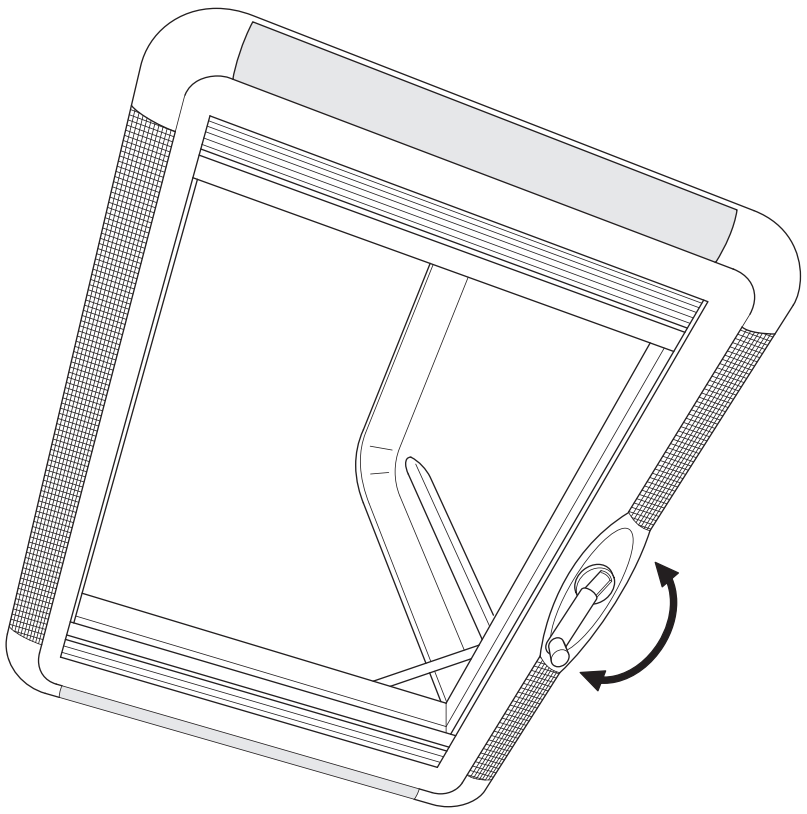

19

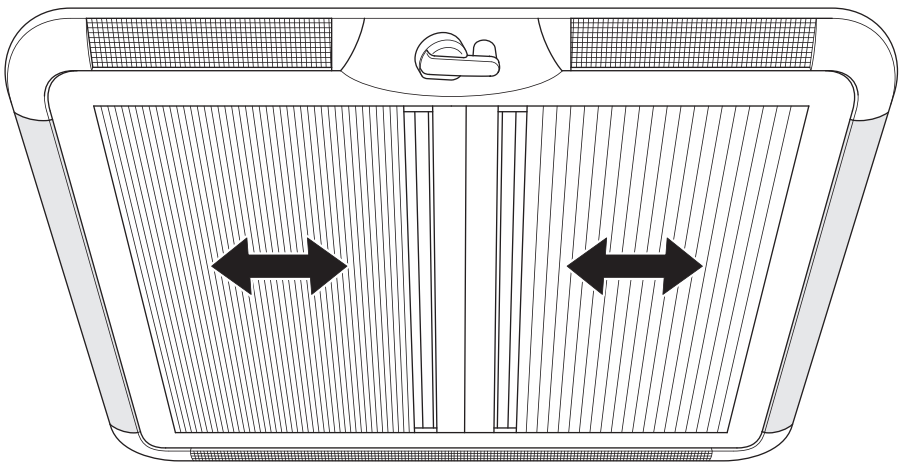

DOMETIC

**YOUR LOCAL DEALER**
**dometic.com/dealer**

**YOUR LOCAL SUPPORT**
**dometic.com/contact**

**YOUR LOCAL SALES OFFICE**
**dometic.com/sales-offices**

A complete list of Dometic companies, which comprise the Dometic Group, can be found in the public filings of:
**DOMETIC GROUP AB** Hemvärnsgatan 15 SE-17154 Solna Sweden

4445101896 L 09/2019 MO1106102B