DOMETIC

SP950T
Universal 2

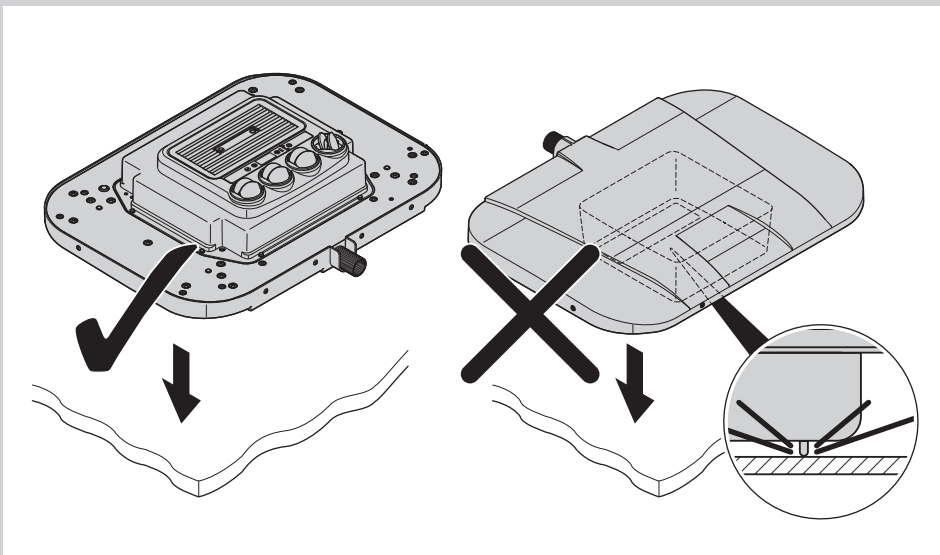

1

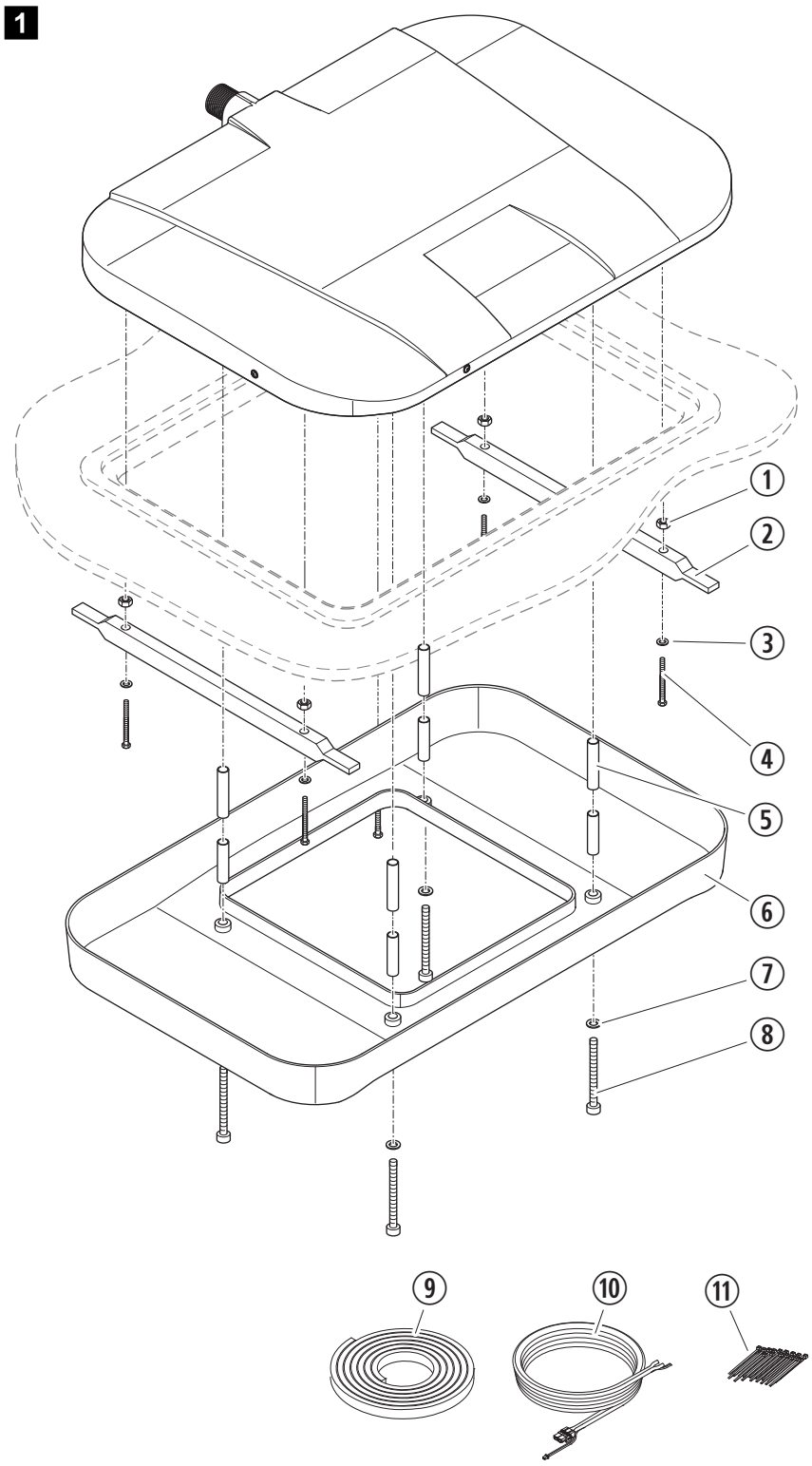

2

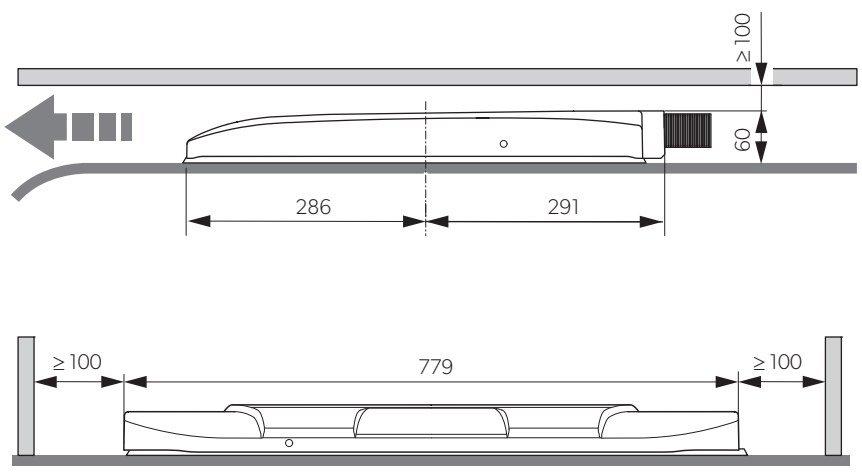

3

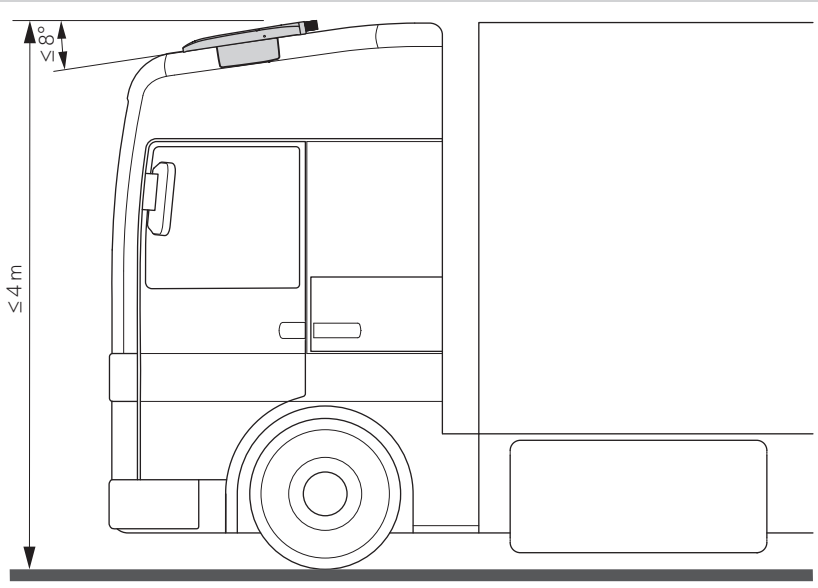

4

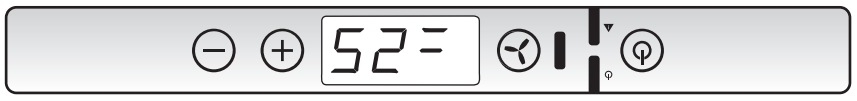

5

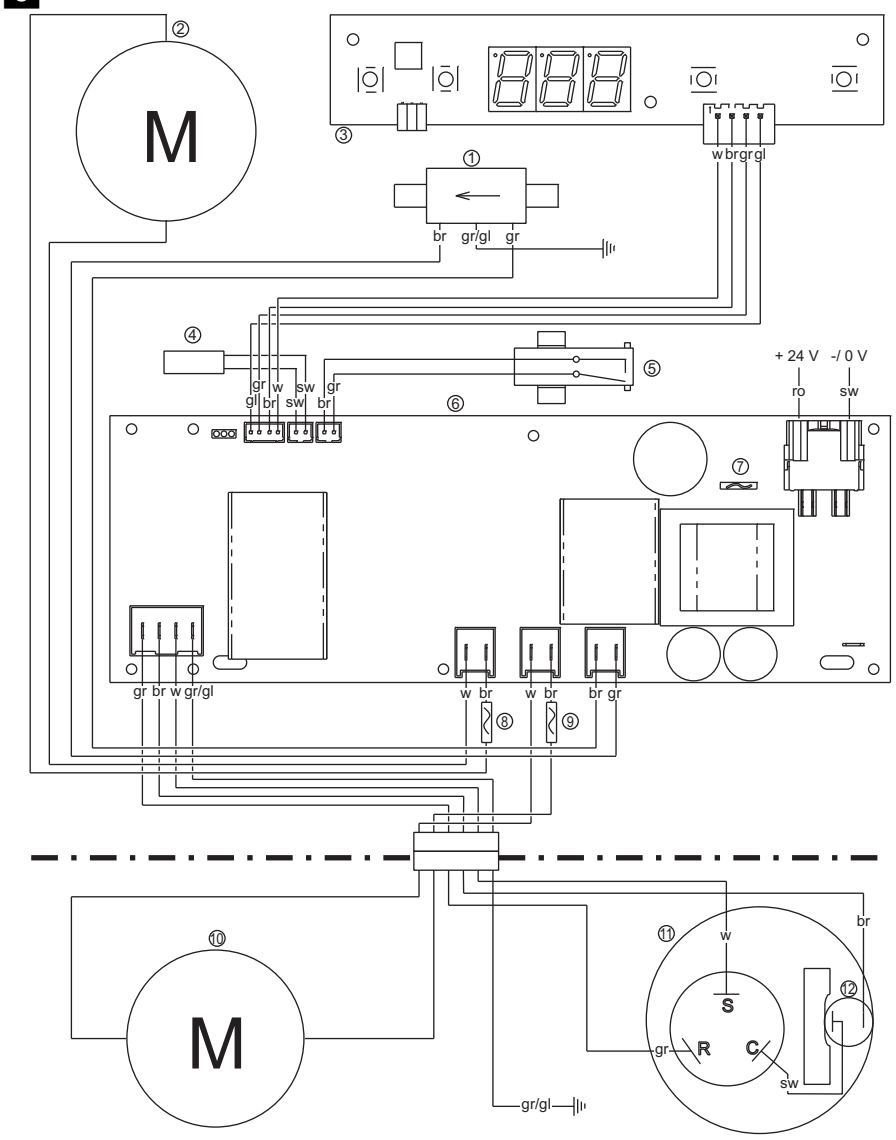

6

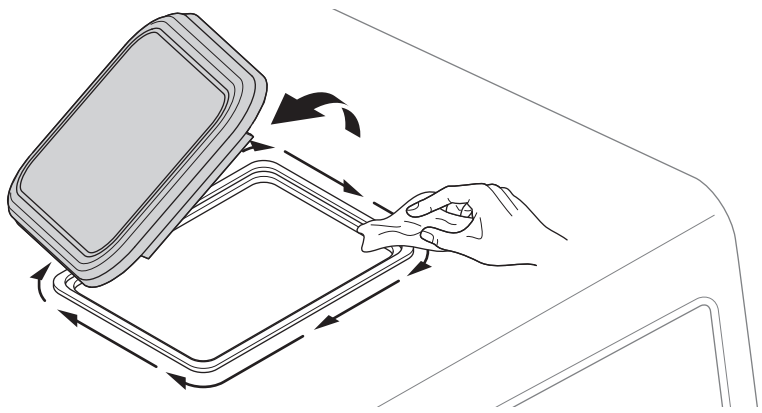

7

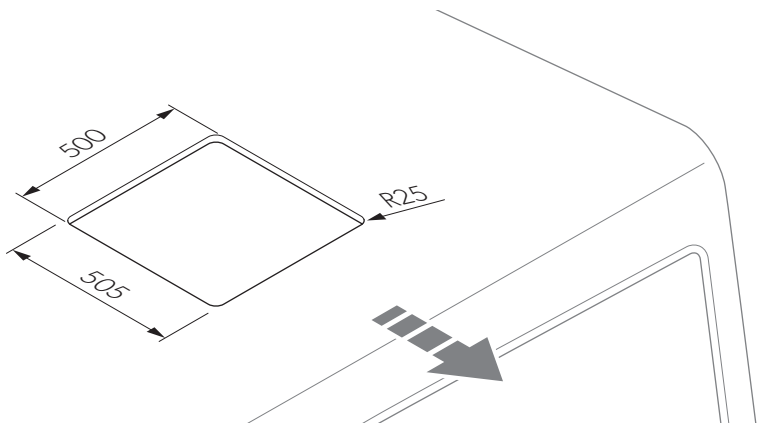

8

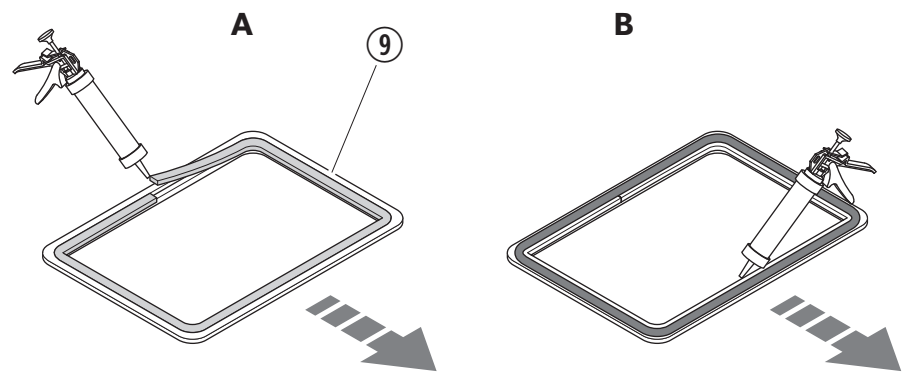

9

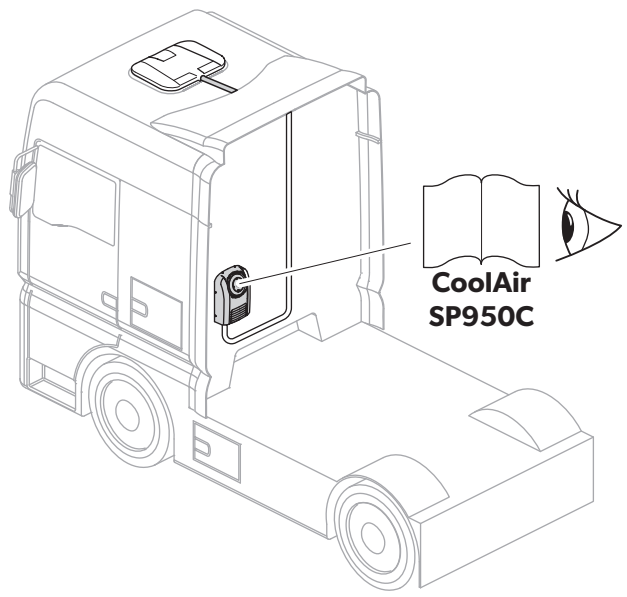

10

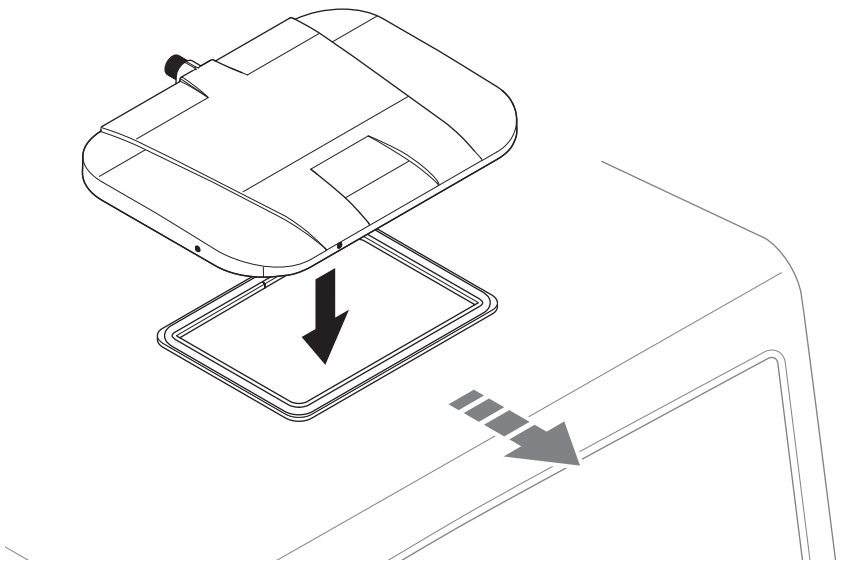

11

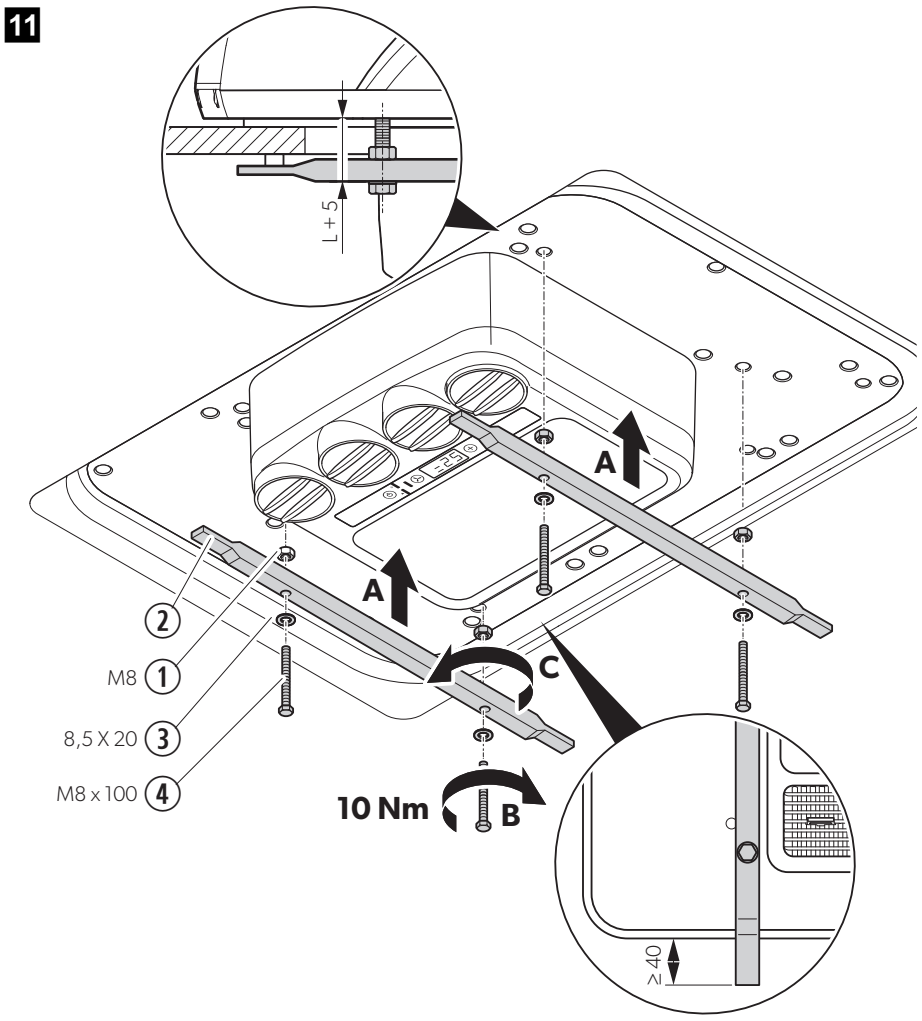

12

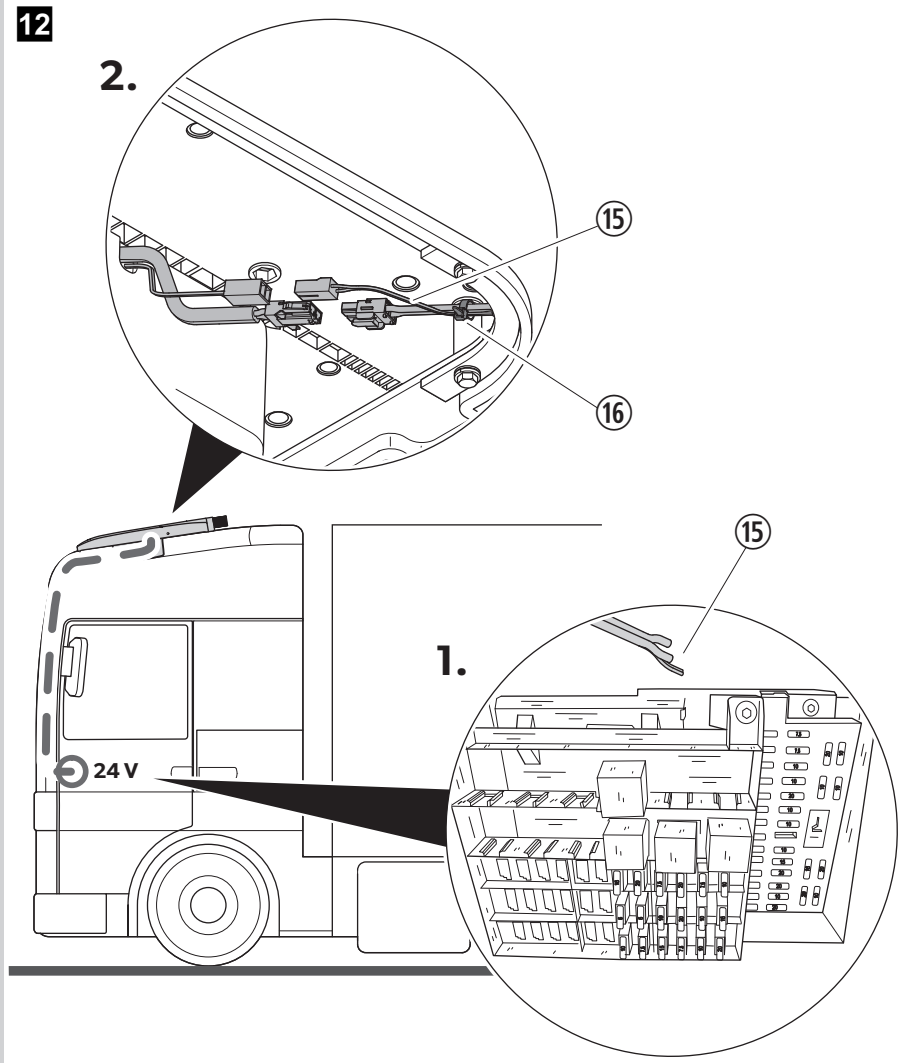

13

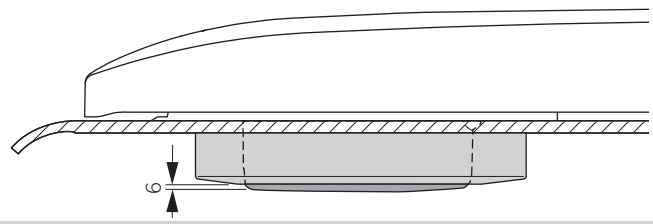

14

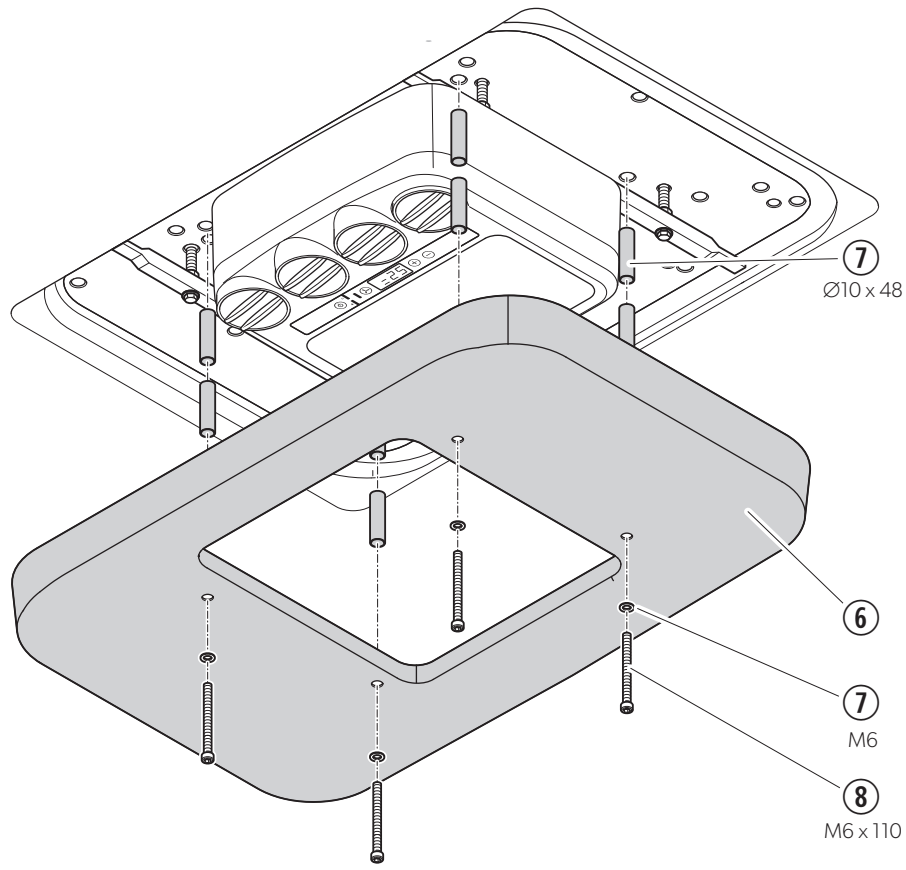

15

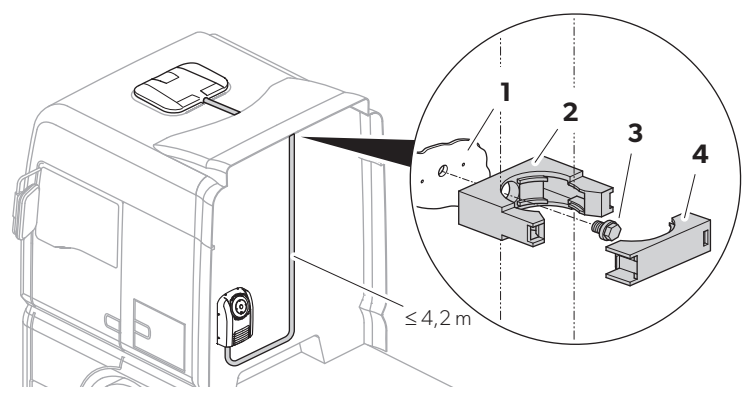

DOMETIC

YOUR LOCAL DEALER
dometic.com/dealer

YOUR LOCAL SUPPORT
dometic.com/contact

YOUR LOCAL SALES OFFICE
dometic.com/sales-offices

A complete list of Dometic companies, which comprise the Dometic Group, can be found in the public filings of:
DOMETIC GROUP AB Hemvärnsgatan 15 SE-17154 Solna Sweden

4445102173 SP L 2020/11/26